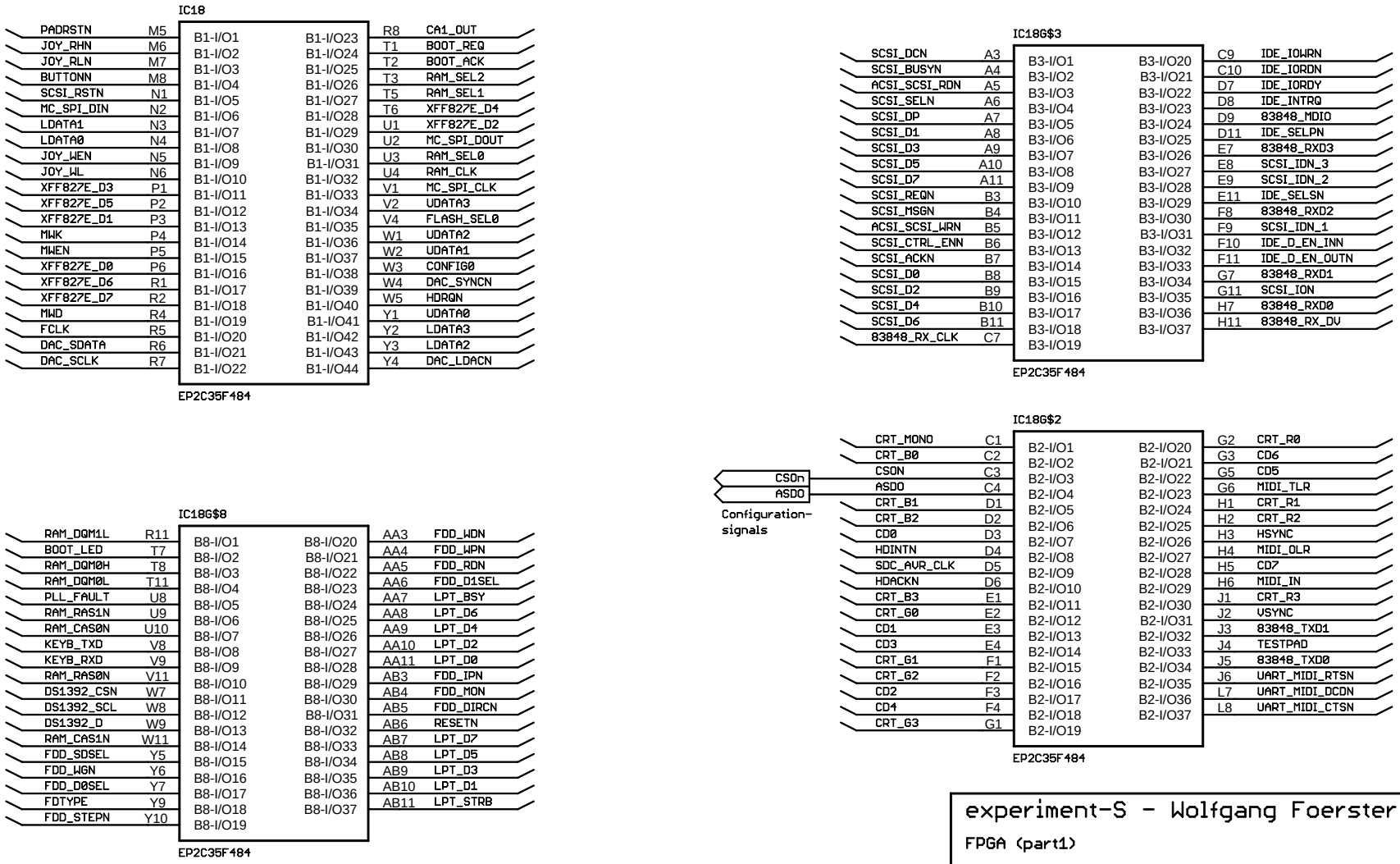

experiment-S - Wolfgang Foerster

FPGA (part1)

TITLE: Suska-III_Series-0001

Document Number:

REV: 2K7A-WF

Date: 16.10.2007 21:09:09

Sheet: 1/21

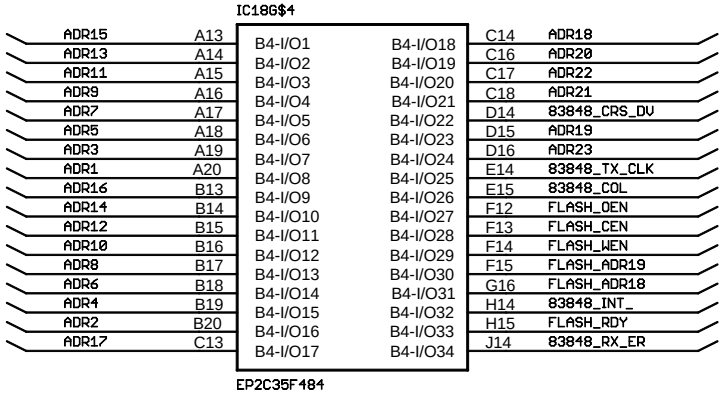

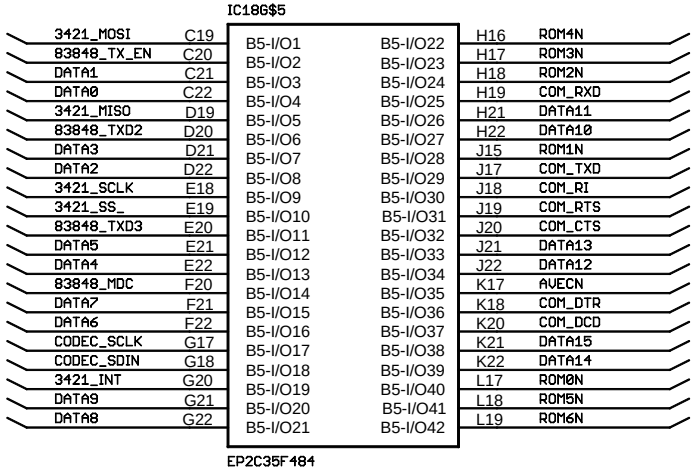

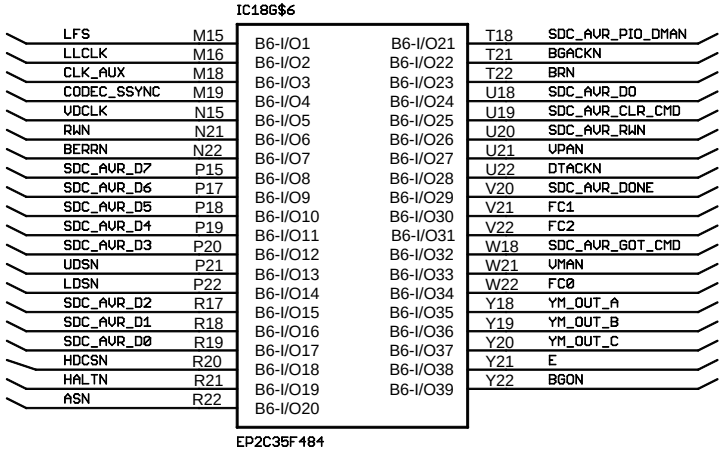

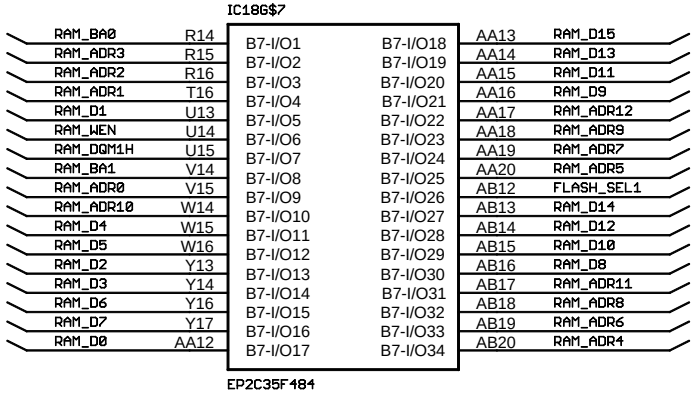

experiment-S - Wolfgang Foerster

FPGA (part 2)

TITLE: Suska-III_Series-0001

Document Number:

REV: 2K7A-WF

Date: 16.10.2007 21:09:09

Sheet: 2/21

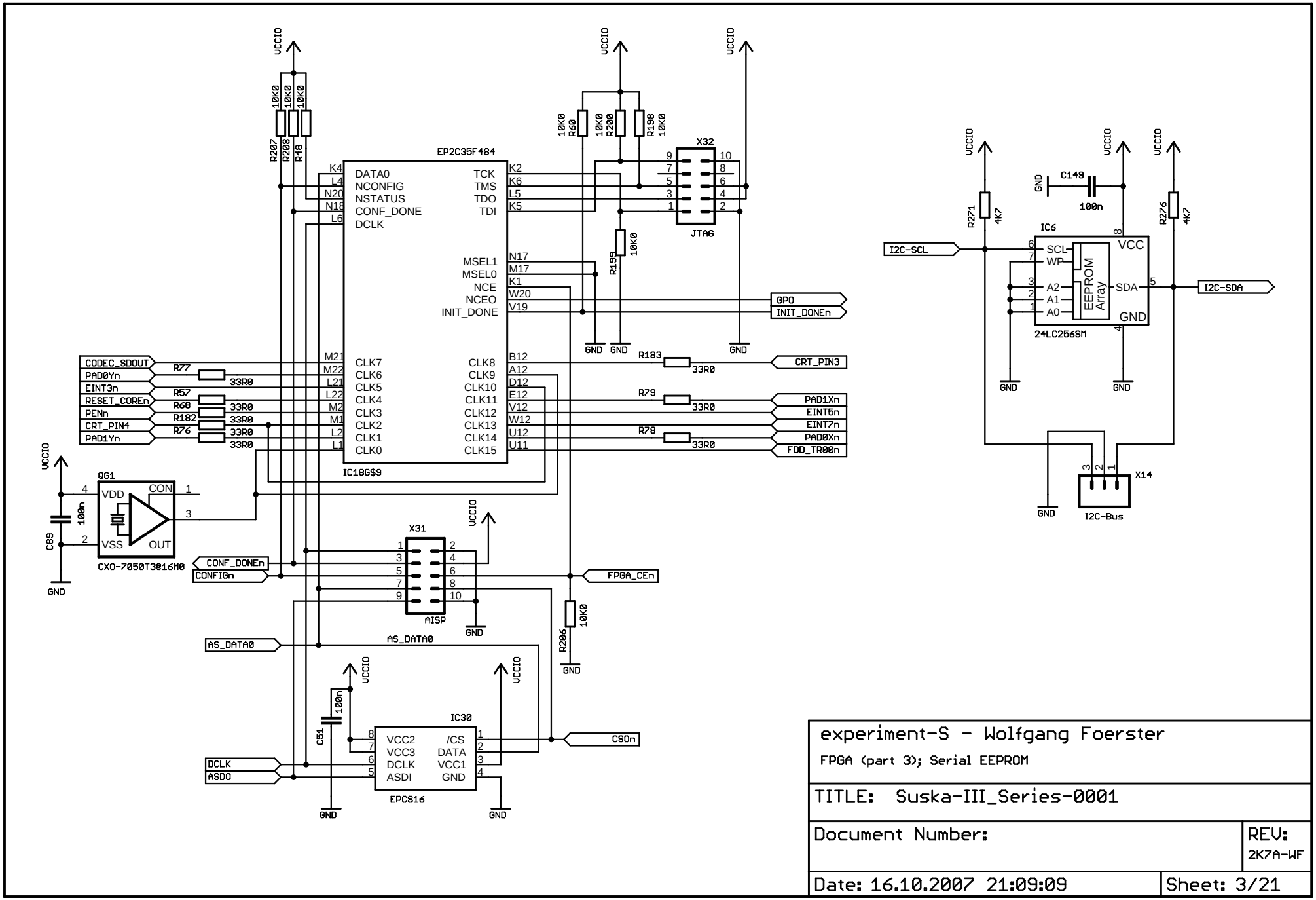
EP2C35F484
IC18G$9
DATA0
NCONFIG
NSTATUS
CONF_DONE
DCLK
TCK
TMS
TDO
TDI
MSEL1
MSEL0
NCE
NCEO
INIT_DONE
CLK7
CLK6
CLK5
CLK4
CLK3
CLK2
CLK1
CLK0
CLK8
CLK9
CLK10
CLK11
CLK12
CLK13
CLK14
CLK15
X32
JTAG
GPO
INIT_DONEn
CRT_PIN3
PAD1Xn
EINT5n
EINT7n
PAD0Xn
FDD_TR00n
CODEC_SDOUT
PAD0Yn
EINT3n
RESET_COREn
PENn
CRT_PIN4
PAD1Yn
QG1
VDD
CON
VSS
OUT
CXO-7050T3016M0
C89
100n
X31
AISP
CONF_DONEn
CONFIGn
FPGA_CEn
AS_DATA0
IC30
EPCS16
VCC2
VCC3
DCLK
ASDI
/CS
DATA
VCC1
GND
CS0n
DCLK
ASDO
C51
VCCIO
GND
IC6
24LC256SM
SCL
WP
A2
A1
A0
VCC
SDA
EEPROM Array
I2C-SCL
I2C-SDA
C149
X14
I2C-Bus
experiment-S - Wolfgang Foerster
FPGA (part 3); Serial EEPROM
TITLE: Suska-III_Series-0001
Document Number:
REV: 2K7A-WF
Date: 16.10.2007 21:09:09
Sheet: 3/21

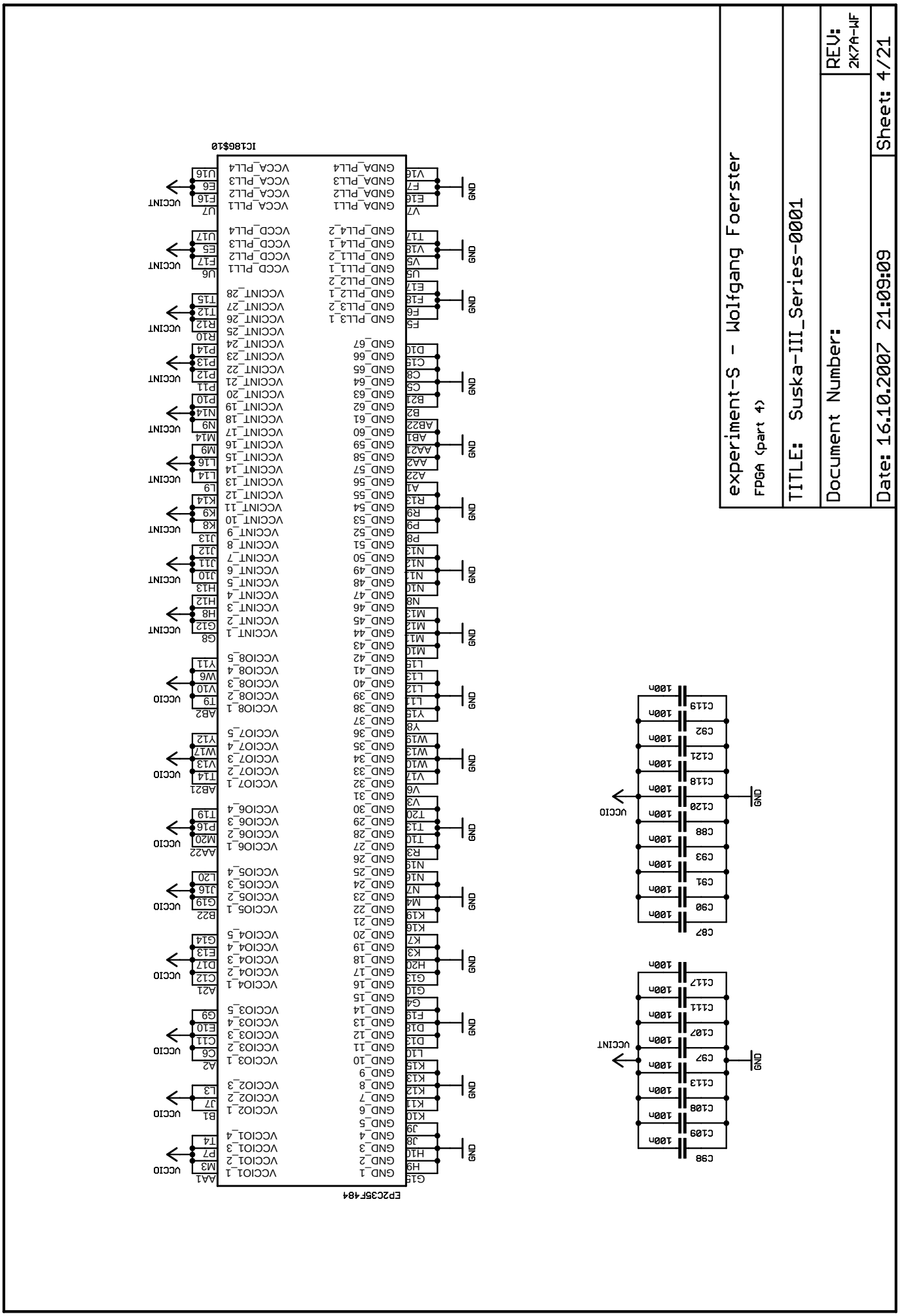
experiment-S - Wolfgang Foerster
FPGA (part 4)
TITLE: Suska-III_Series-0001
Document Number:
REV: 2K7A-WF
Date: 16.10.2007 21:09:09
Sheet: 4/21
IC18G$10
EP2C35F484
VCCIO
VCCINT
GND

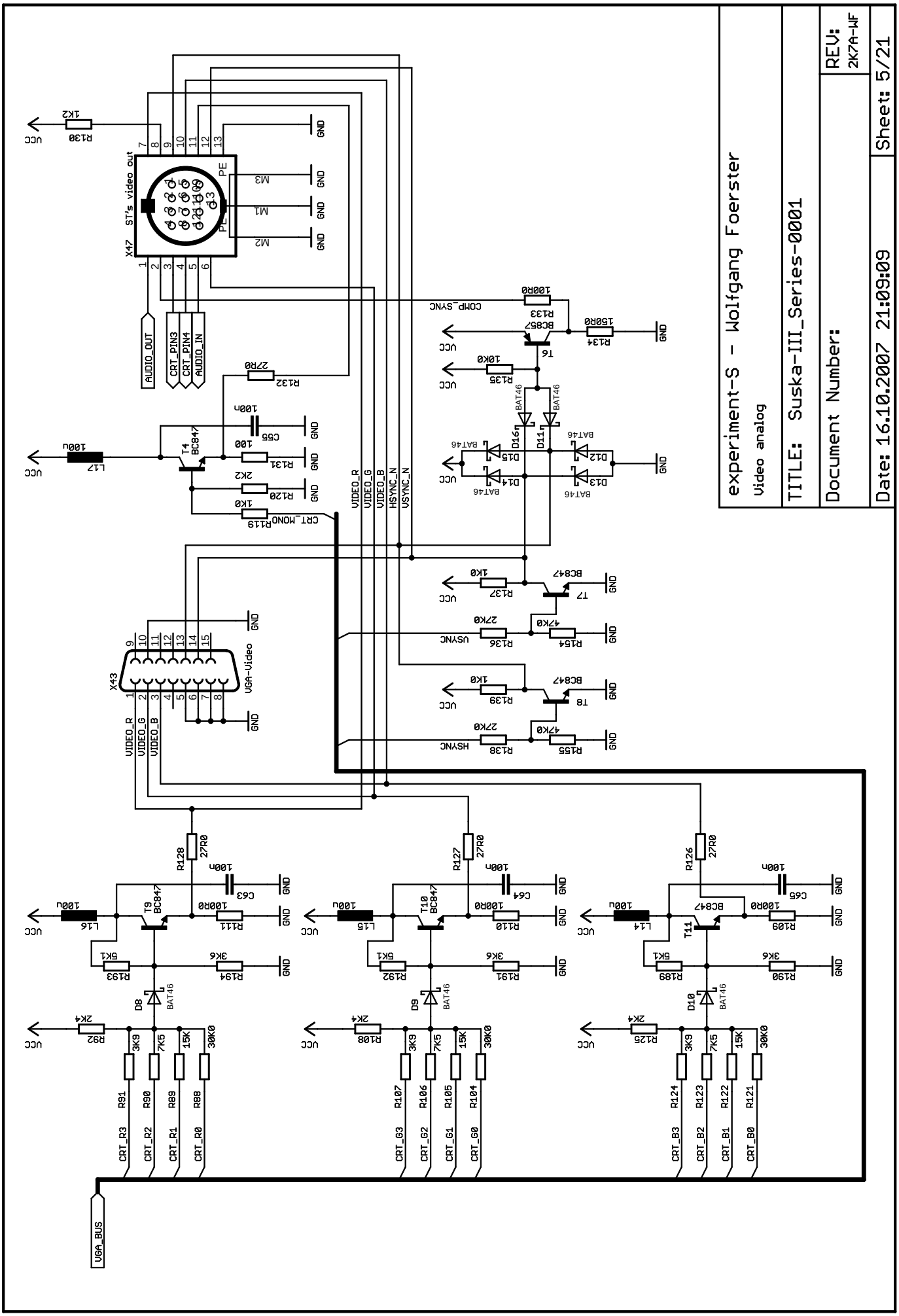
experiment-S - Wolfgang Foerster
Video analog
TITLE: Suska-III_Series-0001
Document Number:
REV: 2K7A-WF
Date: 16.10.2007 21:09:09
Sheet: 5/21
X47 ST's video out
AUDIO_OUT
CRT_PIN3
CRT_PIN4
AUDIO_IN
X43 VGA-Video
VGA_BUS
VIDEO_R
VIDEO_G
VIDEO_B
HSYNC_N
VSYNC_N
COMP_SYNC
CRT_MONO
HSYNC
VSYNC
CRT_R3
CRT_R2
CRT_R1
CRT_R0
CRT_G3
CRT_G2
CRT_G1
CRT_G0
CRT_B3
CRT_B2
CRT_B1
CRT_B0
VCC
GND

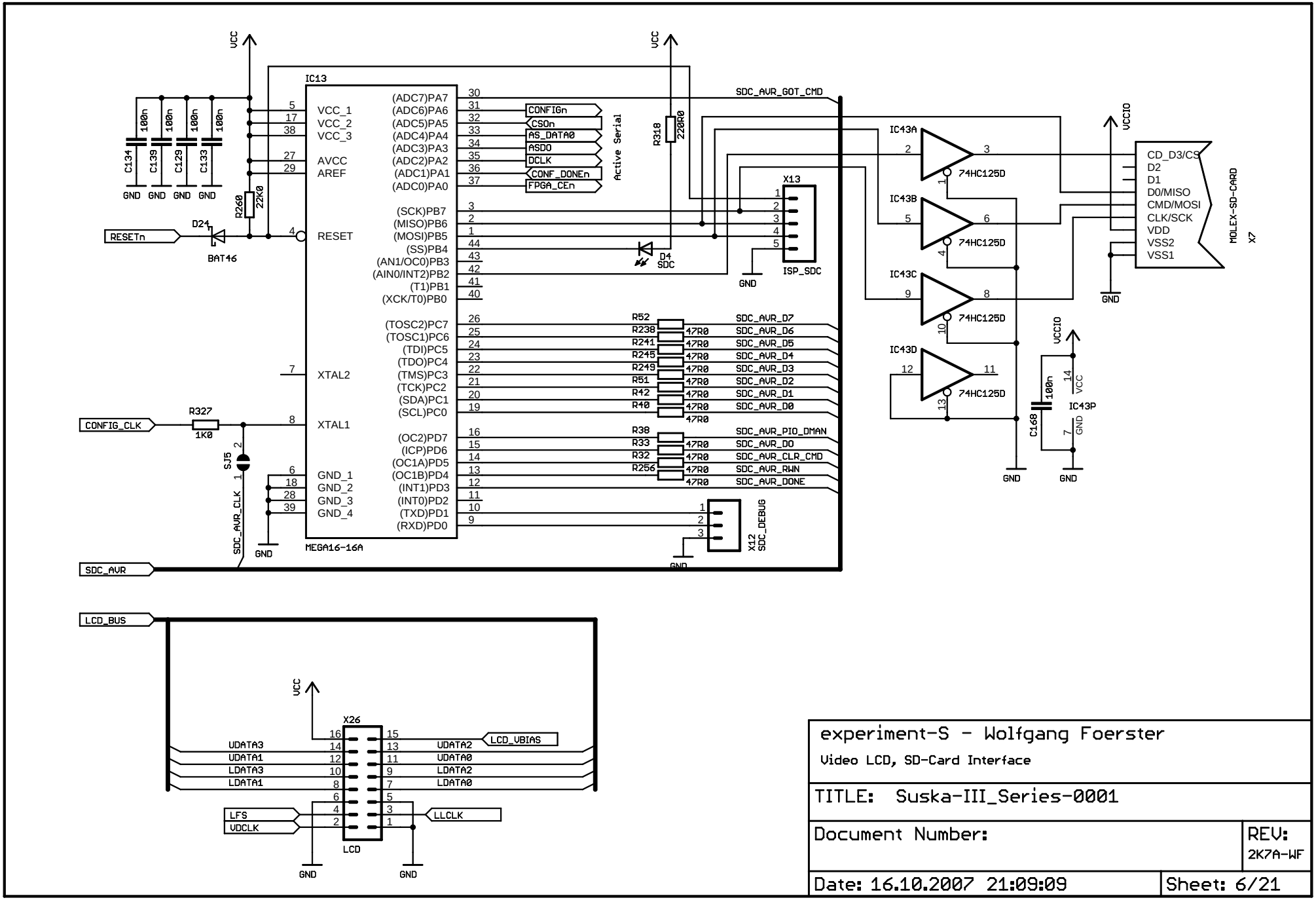

experiment-S - Wolfgang Foerster

Video LCD, SD-Card Interface

TITLE: Suska-III_Series-0001

Document Number:

REV: 2K7A-WF

Date: 16.10.2007 21:09:09

Sheet: 6/21

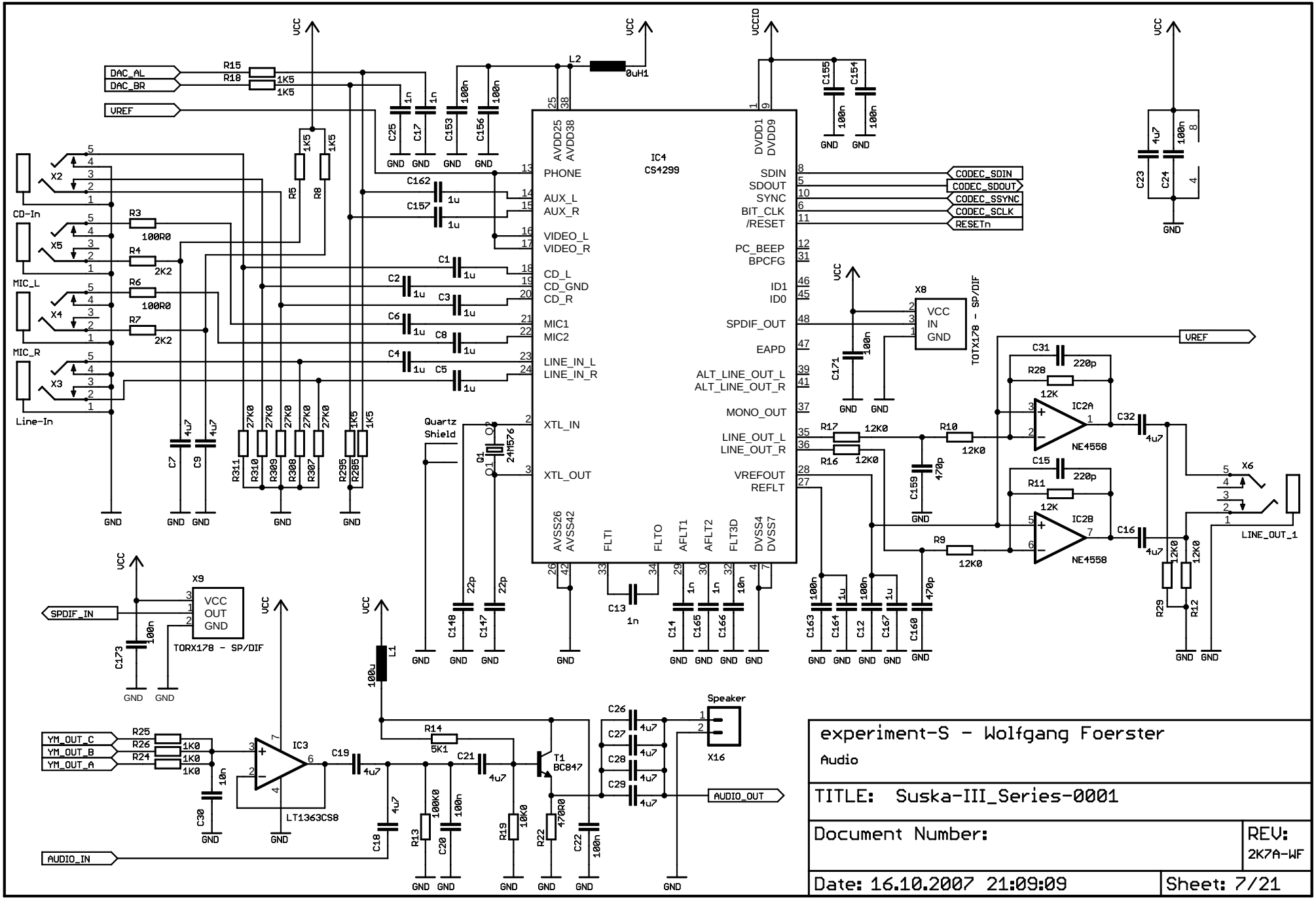
IC4
CS4299
AVDD25
AVDD38
PHONE
AUX_L
AUX_R
VIDEO_L
VIDEO_R
CD_L
CD_GND
CD_R
MIC1
MIC2
LINE_IN_L
LINE_IN_R
XTL_IN
XTL_OUT
AVSS26
AVSS42
FLTI
FLTO
AFLT1
AFLT2
FLT3D
DVSS4
DVSS7
DVDD1
DVDD9
SDIN
SDOUT
SYNC
BIT_CLK
/RESET
PC_BEEP
BPCFG
ID1
ID0
SPDIF_OUT
EAPD
ALT_LINE_OUT_L
ALT_LINE_OUT_R
MONO_OUT
LINE_OUT_L
LINE_OUT_R
VREFOUT
REFLT
CODEC_SDIN
CODEC_SDOUT
CODEC_SSYNC
CODEC_SCLK
RESETn
DAC_AL
DAC_BR
VREF
CD-In
MIC_L
MIC_R
Line-In
Quartz
Shield
SPDIF_IN
TORX178 - SP/DIF
VCC
IN
GND
VCC
OUT
GND
IC2A
IC2B
NE4558
IC3
LT1363CS8
YM_OUT_C
YM_OUT_B
YM_OUT_A
AUDIO_IN
AUDIO_OUT
Speaker
T1
BC847
LINE_OUT_1
experiment-S - Wolfgang Foerster
Audio
TITLE: Suska-III_Series-0001
Document Number:
REV:
2K7A-WF
Date: 16.10.2007 21:09:09
Sheet: 7/21

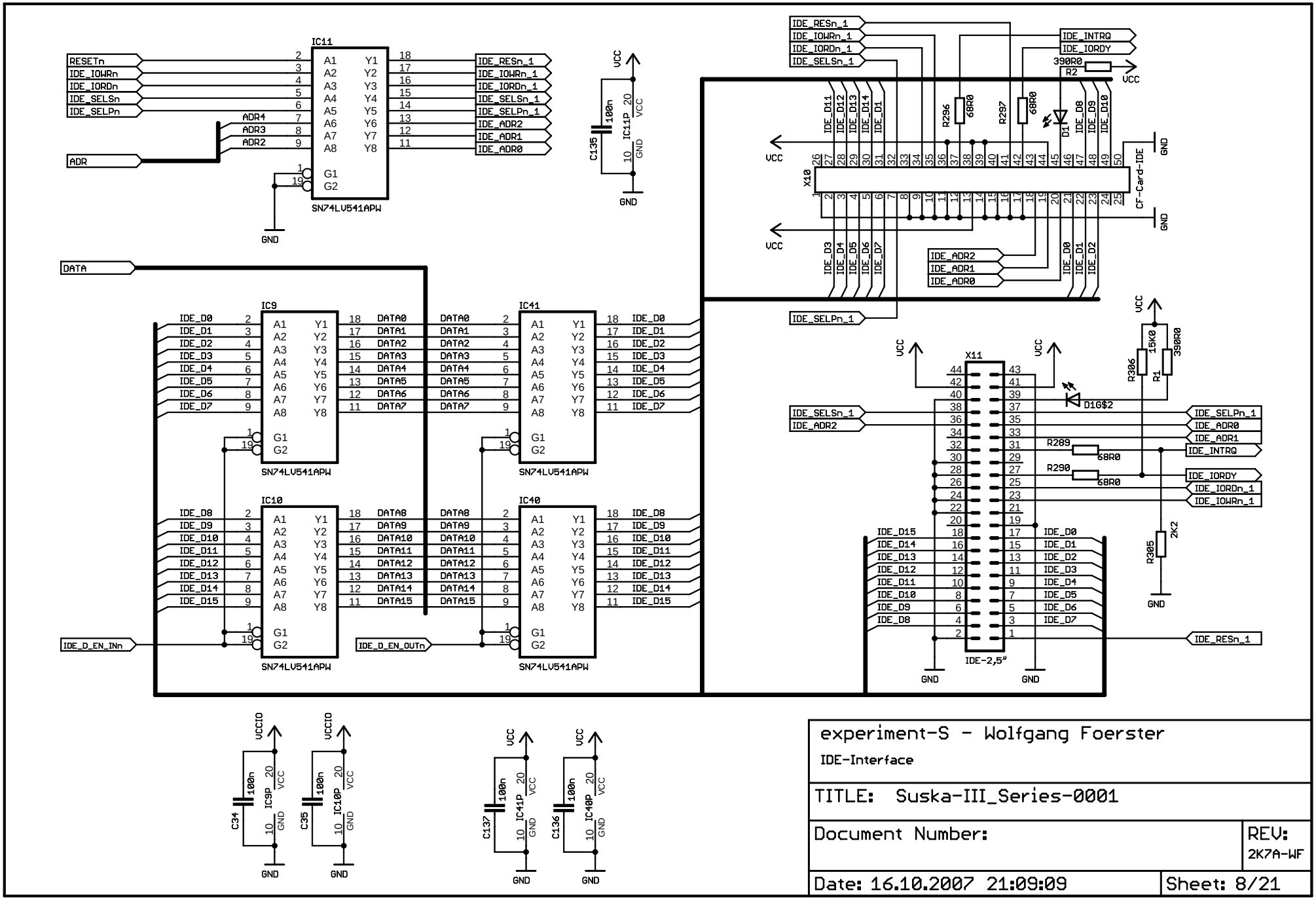
IC11
SN74LV541APW
RESETn
IDE_IOWRn
IDE_IORDn
IDE_SELSn
IDE_SELPn
ADR4
ADR3
ADR2
ADR
IDE_RESn_1
IDE_IOWRn_1
IDE_IORDn_1
IDE_SELSn_1
IDE_SELPn_1
IDE_ADR2
IDE_ADR1
IDE_ADR0
C135
100n
IC11P
VCC
GND
DATA
IC9
IC10
IC41
IC40
IDE_D_EN_INn
IDE_D_EN_OUTn
X10
CF-Card-IDE
IDE_INTRQ
IDE_IORDY
R2
390R0
R296
68R0
R297
D1
X11
IDE-2,5"
D16$2
R306
15K0
R1
390R0
R289
R290
R305
2K2
C34
C35
C137
C136
IC9P
IC10P
IC41P
IC40P
VCCIO
experiment-S - Wolfgang Foerster
IDE-Interface
TITLE: Suska-III_Series-0001
Document Number:
REV: 2K7A-WF
Date: 16.10.2007 21:09:09
Sheet: 8/21

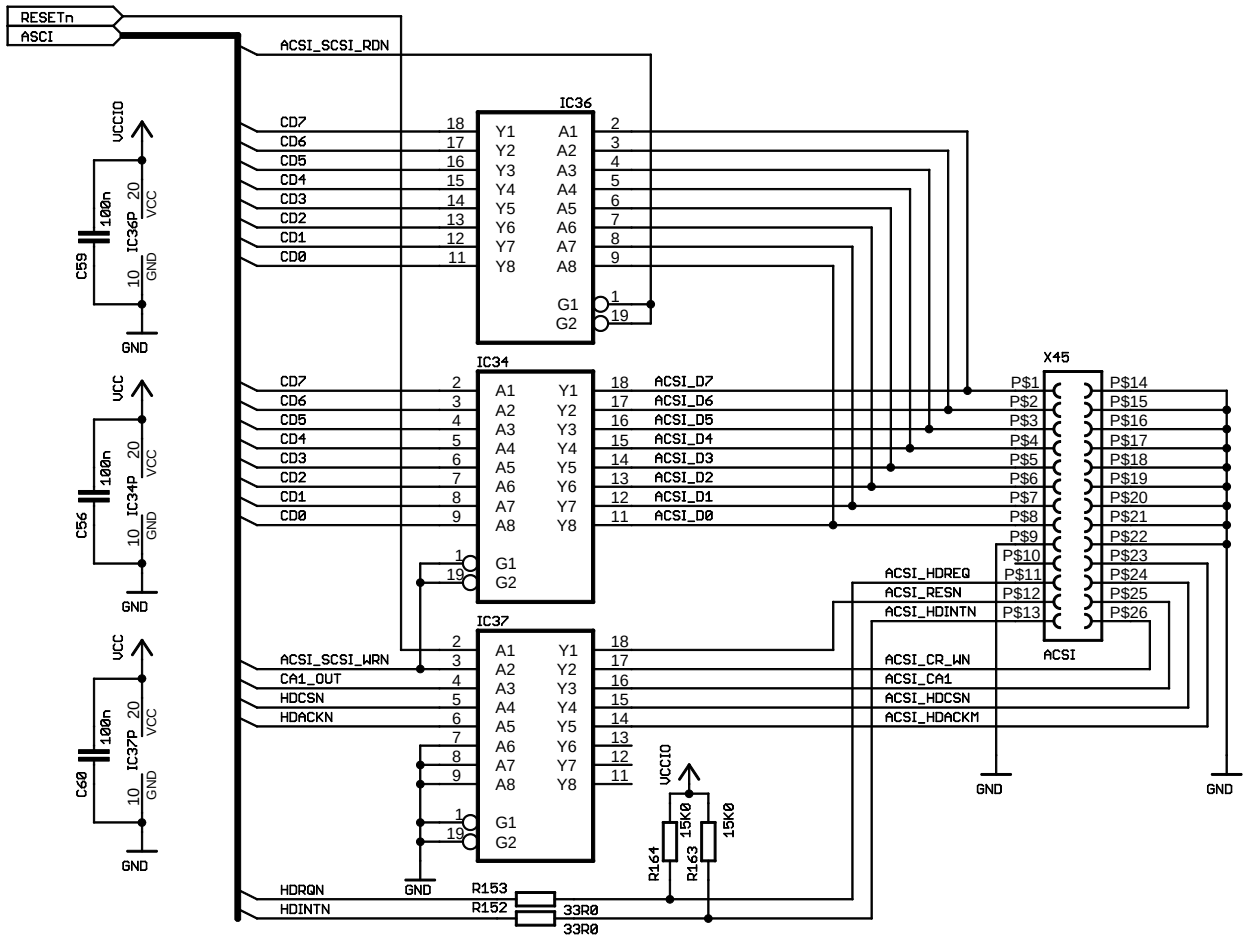

experiment-S - Wolfgang Foerster

ACSI-Interface

TITLE: Suska-III_Series-0001

Document Number:

REV: 2K7A-WF

Date: 16.10.2007 21:09:09

Sheet: 9/21

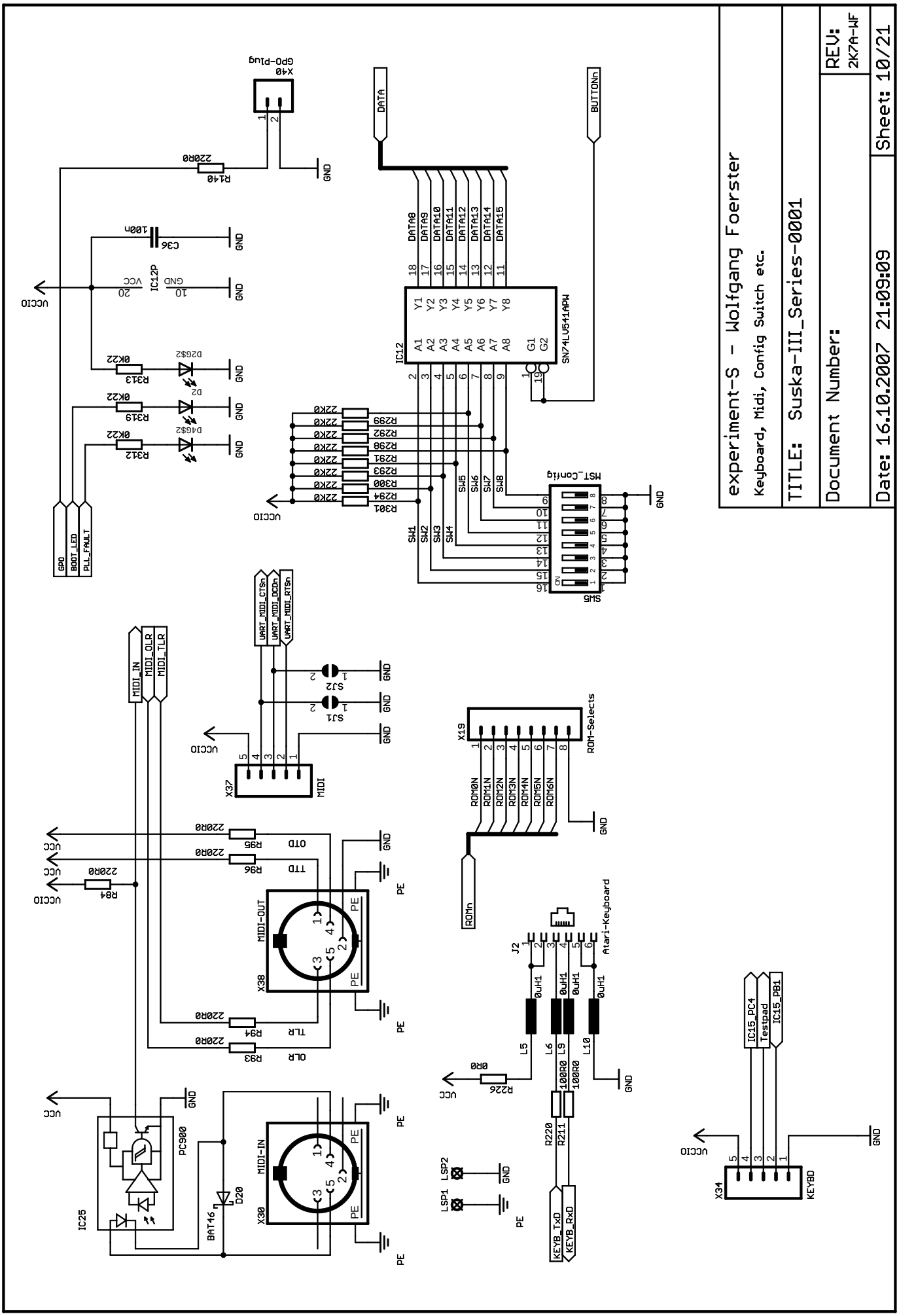
experiment-S - Wolfgang Foerster
Keyboard, Midi, Config Switch etc.
TITLE: Suska-III_Series-0001
Document Number:
REV: 2K7A-WF
Date: 16.10.2007 21:09:09
Sheet: 10/21
IC12
SN74LV541APW
MST_Config
SW5
X40
GPO-Plug
DATA
BUTTONn
IC12P
X37
MIDI
X38
MIDI-OUT
X30
MIDI-IN
IC25
PC900
X19
ROM-Selects
J2
Atari-Keyboard
X34
KEYBD
IC15_PC4
Testpad
IC15_PB1
VCCIO
GND
PE

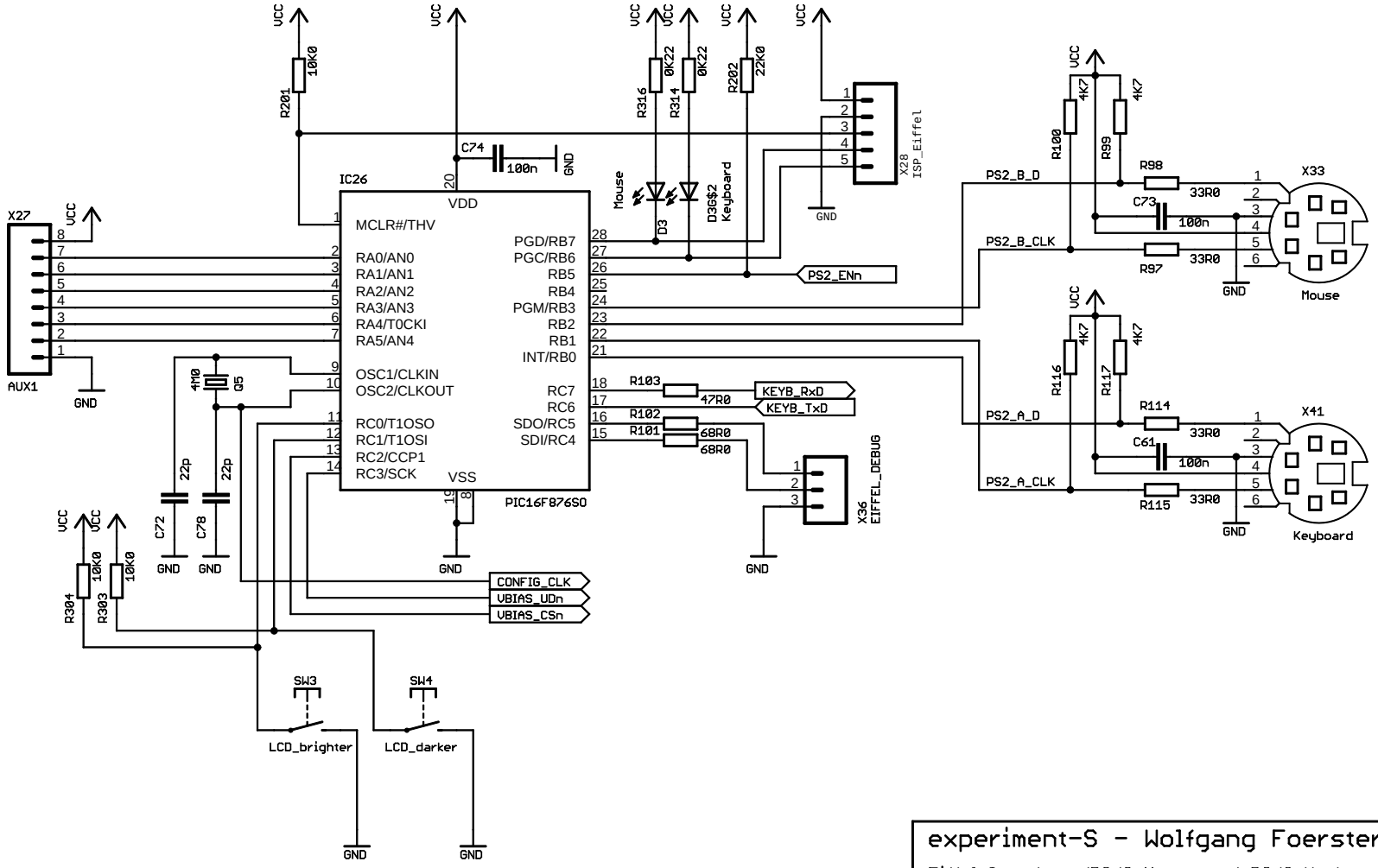

experiment-S - Wolfgang Foerster

Eiffel-Interface (PS/2-Mouse and PS/2-Keyboard)

TITLE: Suska-III_Series-0001

Document Number:

REV: 2K7A-WF

Date: 16.10.2007 21:09:09

Sheet: 11/21

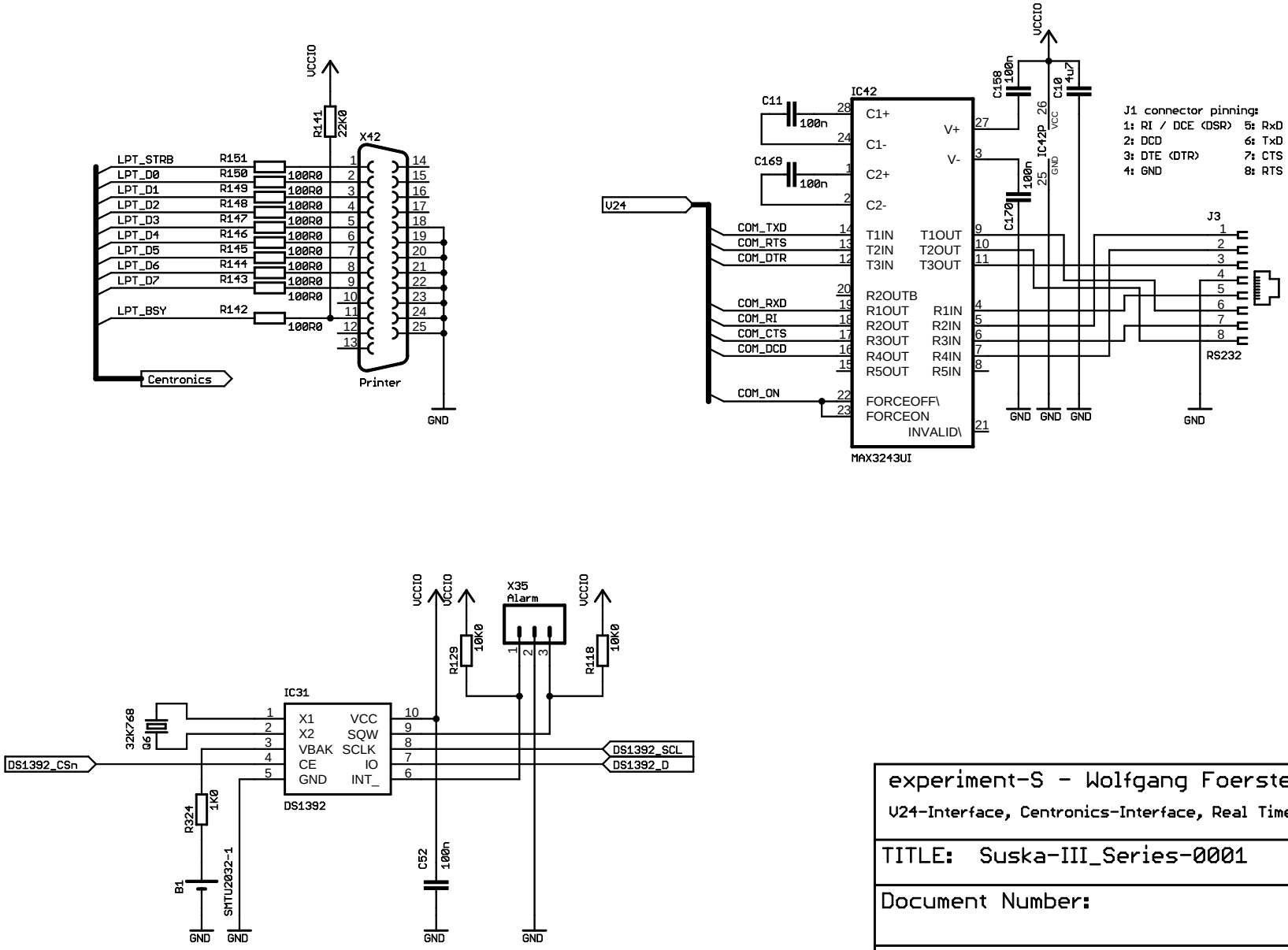

experiment-S - Wolfgang Foerster

V24-Interface, Centronics-Interface, Real Time Clock

TITLE: Suska-III_Series-0001

Document Number:

REV: 2K7A-WF

Date: 16.10.2007 21:09:09

Sheet: 12/21

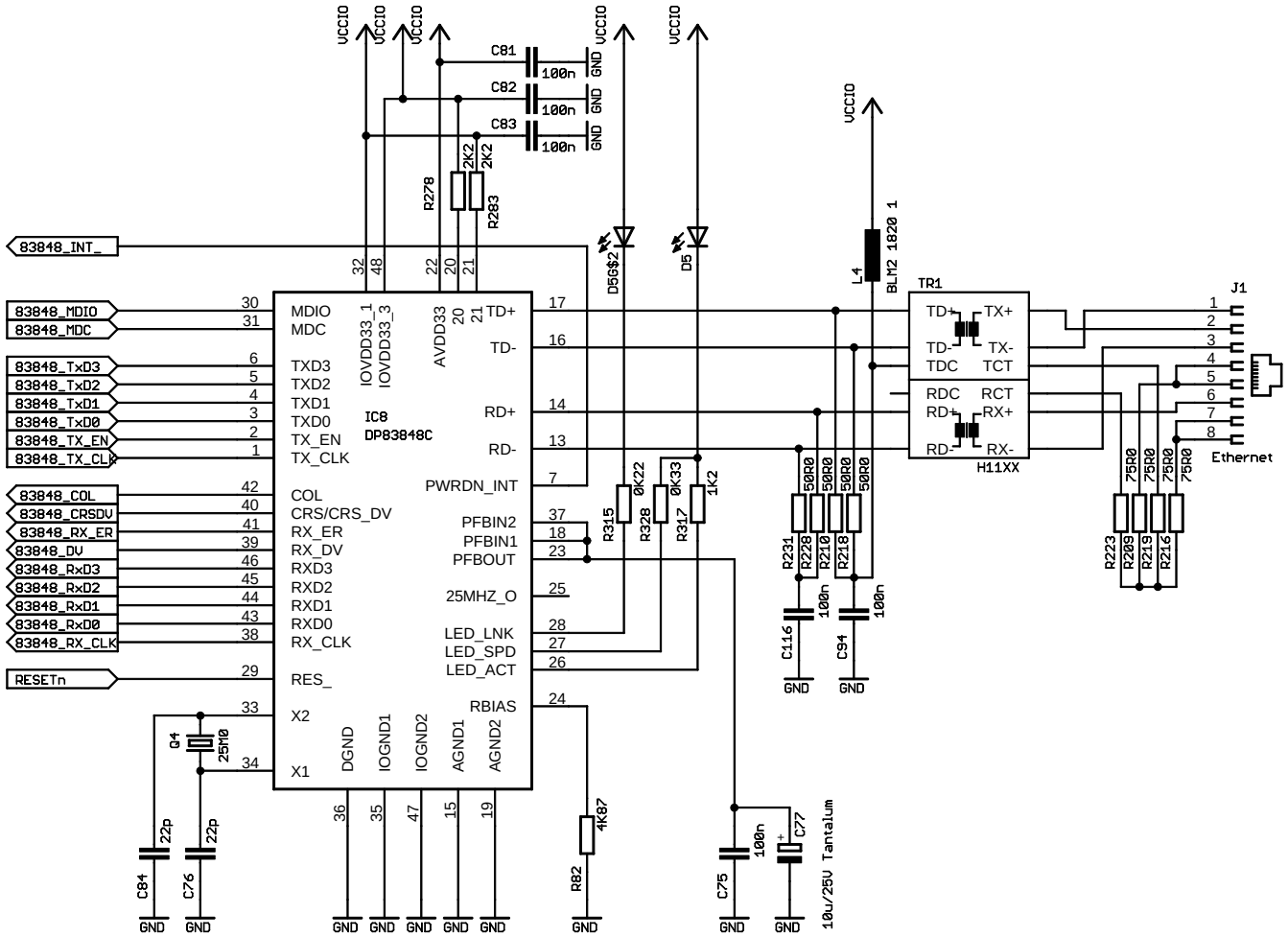

experiment-S - Wolfgang Foerster

TCP/IP-Interface

TITLE: Suska-III_Series-0001

Document Number:

REV: 2K7A-WF

Date: 16.10.2007 21:09:09

Sheet: 13/21

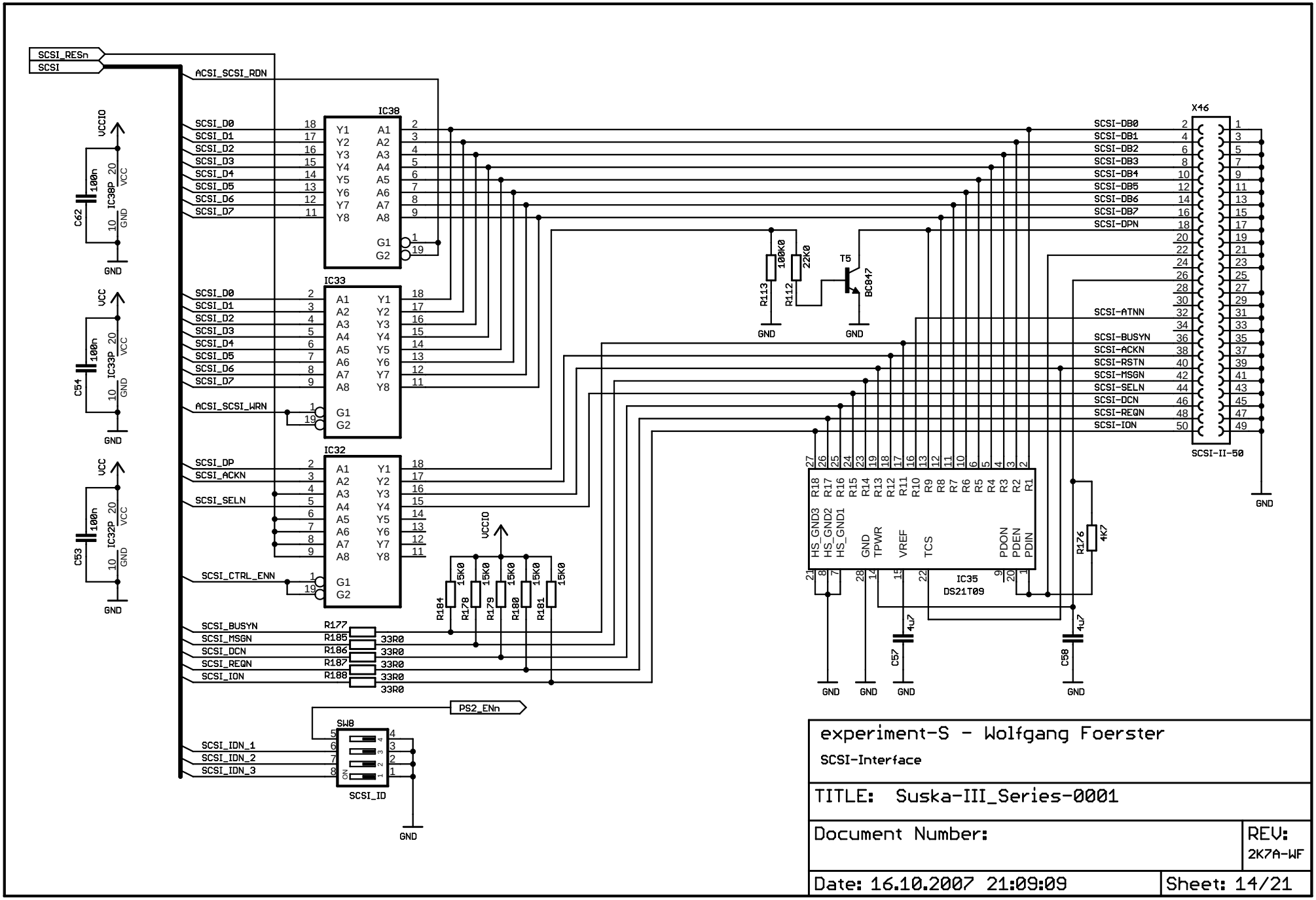
SCSI_RESn
SCSI
ACSI_SCSI_RDN
IC38
IC33
IC32
SCSI_D0
SCSI_D1
SCSI_D2
SCSI_D3
SCSI_D4
SCSI_D5
SCSI_D6
SCSI_D7
ACSI_SCSI_WRN
SCSI_DP
SCSI_ACKN
SCSI_SELN
SCSI_CTRL_ENN
SCSI_BUSYN
SCSI_MSGN
SCSI_DCN
SCSI_REQN
SCSI_ION
SCSI_IDN_1
SCSI_IDN_2
SCSI_IDN_3
PS2_ENn
SW8
SCSI_ID
VCCIO
VCC
GND
C62
C54
C53
R177
R185
R186
R187
R188
33R0
R184
R178
R179
R180
R181
15K0
R113
R112
100K0
22K0
T5
BC847
IC35
DS21T09
HS_GND3
HS_GND2
HS_GND1
GND
TPWR
VREF
TCS
PDON
PDEN
PDIN
R176
4K7
C57
C58
4u7
X46
SCSI-DB0
SCSI-DB1
SCSI-DB2
SCSI-DB3
SCSI-DB4
SCSI-DB5
SCSI-DB6
SCSI-DB7
SCSI-DPN
SCSI-ATNN
SCSI-BUSYN
SCSI-ACKN
SCSI-RSTN
SCSI-MSGN
SCSI-SELN
SCSI-DCN
SCSI-REQN
SCSI-ION
SCSI-II-50
experiment-S - Wolfgang Foerster
SCSI-Interface
TITLE: Suska-III_Series-0001
Document Number:
REV:
2K7A-WF
Date: 16.10.2007 21:09:09
Sheet: 14/21

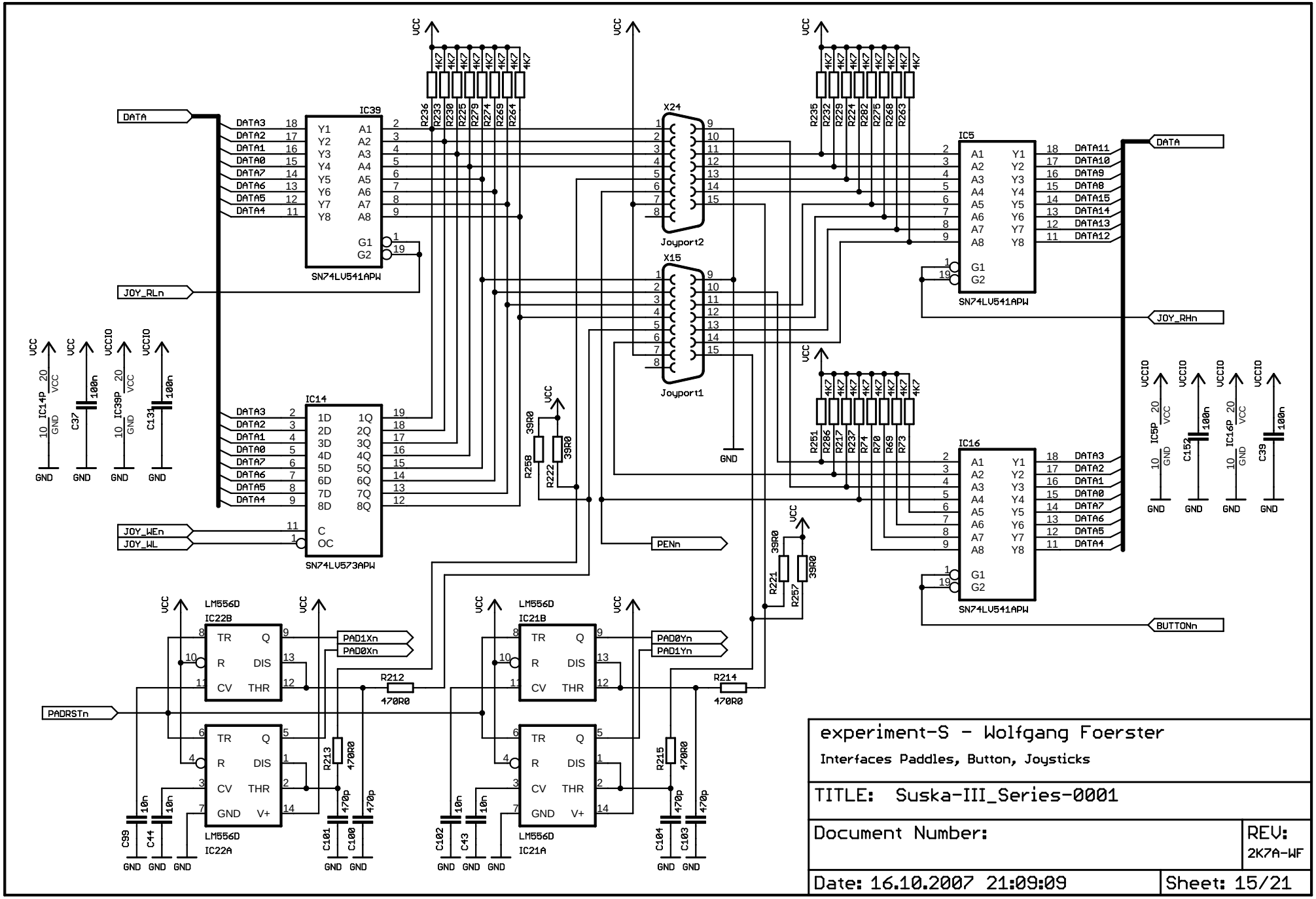
experiment-S - Wolfgang Foerster
Interfaces Paddles, Button, Joysticks
TITLE: Suska-III_Series-0001
Document Number:
REV: 2K7A-WF
Date: 16.10.2007 21:09:09
Sheet: 15/21
IC39
SN74LV541APW
IC14
SN74LV573APW
IC5
IC16
X24
Joyport2
X15
Joyport1
IC22B
IC22A
IC21B
IC21A
LM556D
DATA
JOY_RLn
JOY_WEn
JOY_WL
PENn
JOY_RHn
BUTTONn
PADRSTn
PAD1Xn
PAD0Xn
PAD0Yn
PAD1Yn
VCC
GND
VCCIO

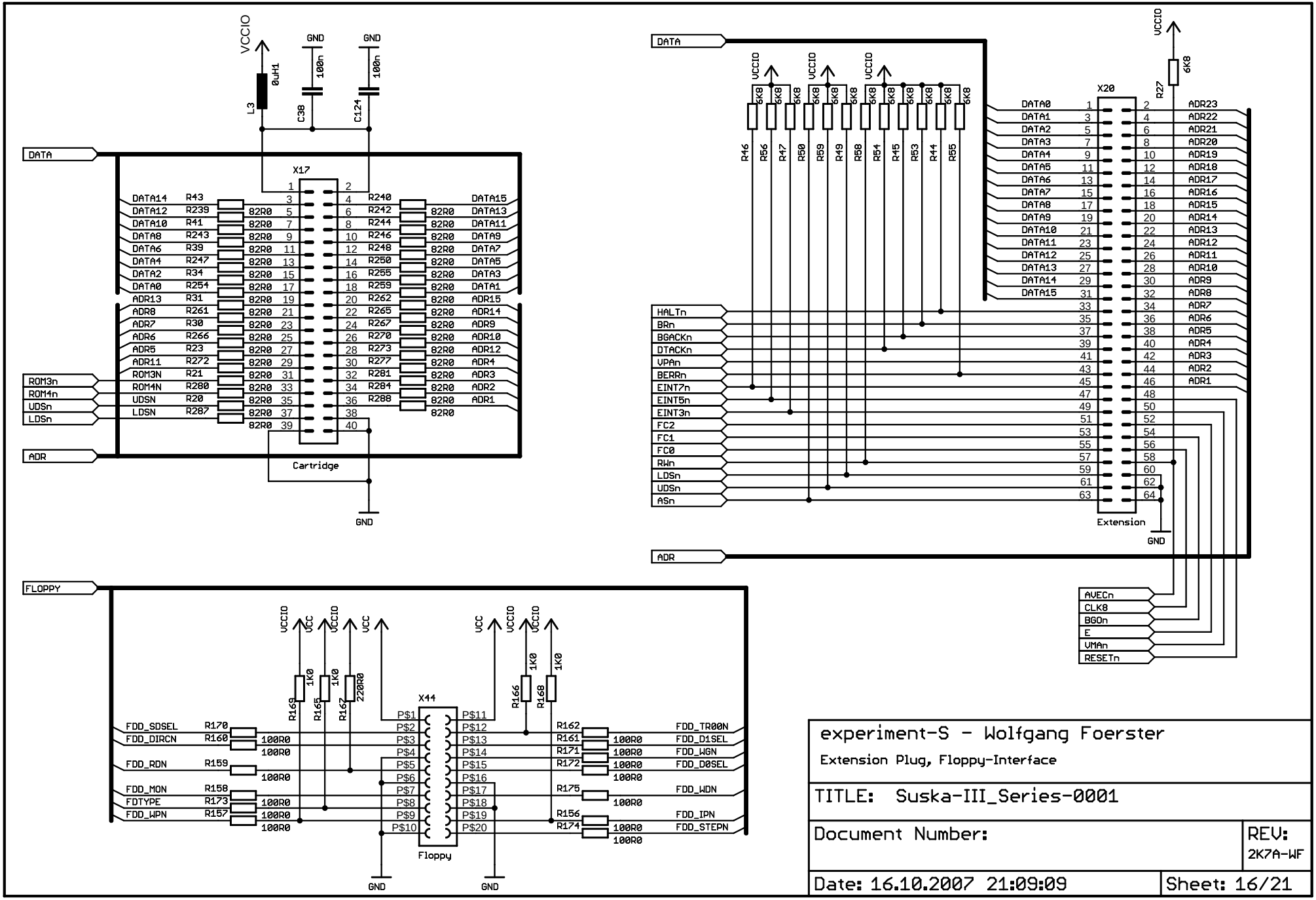

experiment-S - Wolfgang Foerster

Extension Plug, Floppy-Interface

TITLE: Suska-III_Series-0001

Document Number:

REV: 2K7A-WF

Date: 16.10.2007 21:09:09

Sheet: 16/21

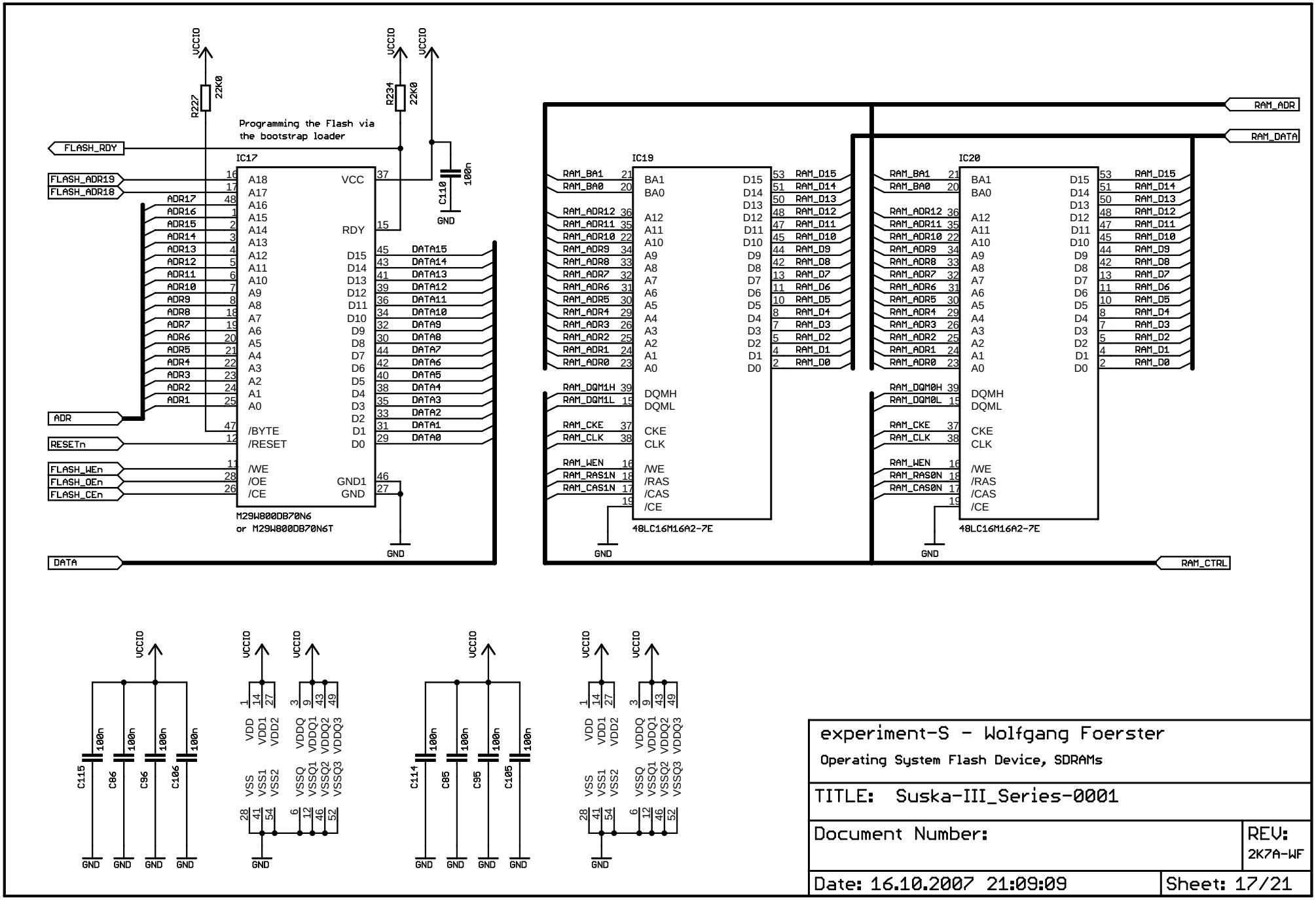
Programming the Flash via
the bootstrap loader
IC17
M29W800DB70N6
or M29W800DB70N6T
IC19
IC20
48LC16M16A2-7E
48LC16M16A2-7E
RAM_ADR
RAM_DATA
RAM_CTRL
FLASH_RDY
FLASH_ADR19
FLASH_ADR18
ADR
RESETn
FLASH_WEn
FLASH_OEn
FLASH_CEn
DATA
VCCIO
GND
R227 22K0
R234 22K0
C110 100n
C115 100n
C86 100n
C96 100n
C106 100n
C114 100n
C85 100n
C95 100n
C105 100n
experiment-S - Wolfgang Foerster
Operating System Flash Device, SDRAMs
TITLE: Suska-III_Series-0001
Document Number:
REV: 2K7A-WF
Date: 16.10.2007 21:09:09
Sheet: 17/21

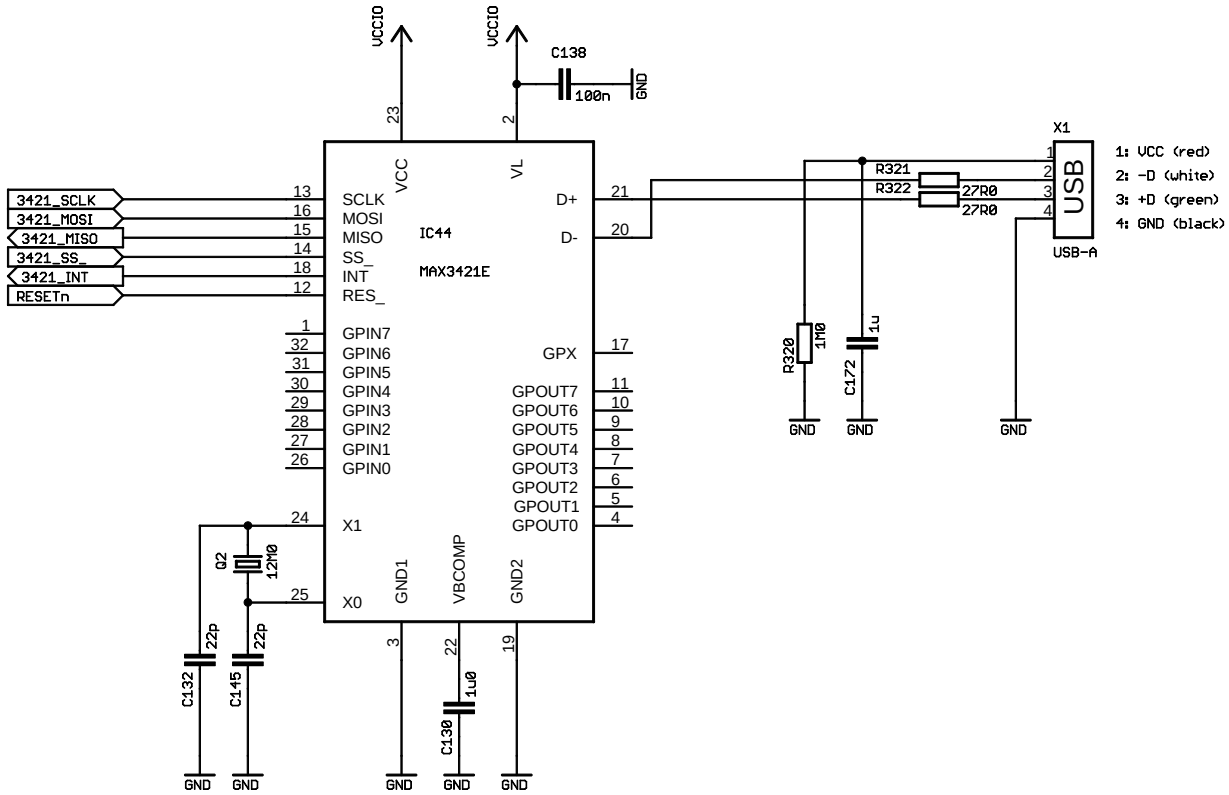

experiment-S - Wolfgang Foerster

USB20 Host/Devive Interface

TITLE: Suska-III_Series-0001

Document Number:

REV: 2K7A-WF

Date: 16.10.2007 21:09:09

Sheet: 18/21

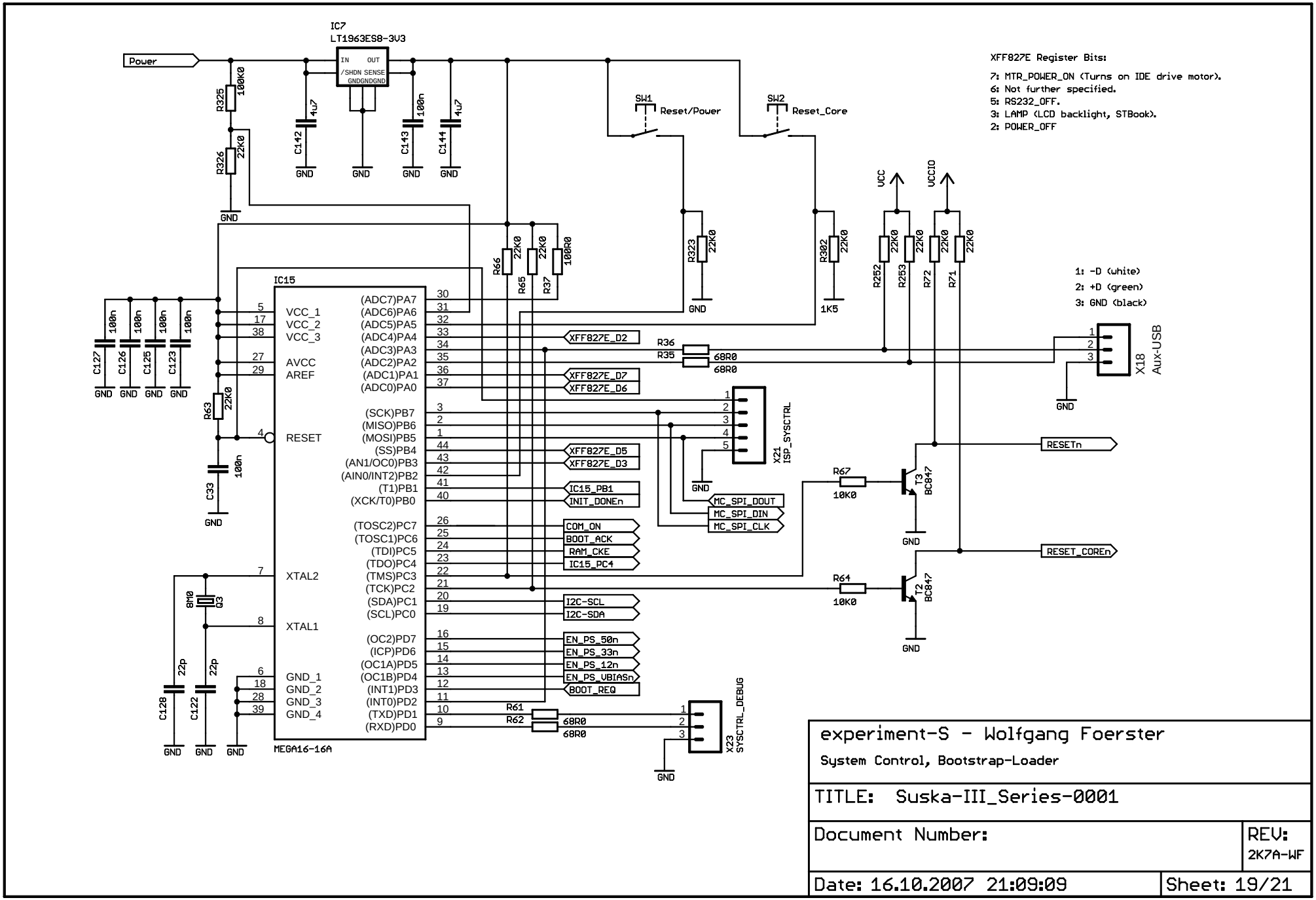

experiment-S - Wolfgang Foerster

System Control, Bootstrap-Loader

TITLE: Suska-III_Series-0001

Document Number:

REV: 2K7A-WF

Date: 16.10.2007 21:09:09

Sheet: 19/21

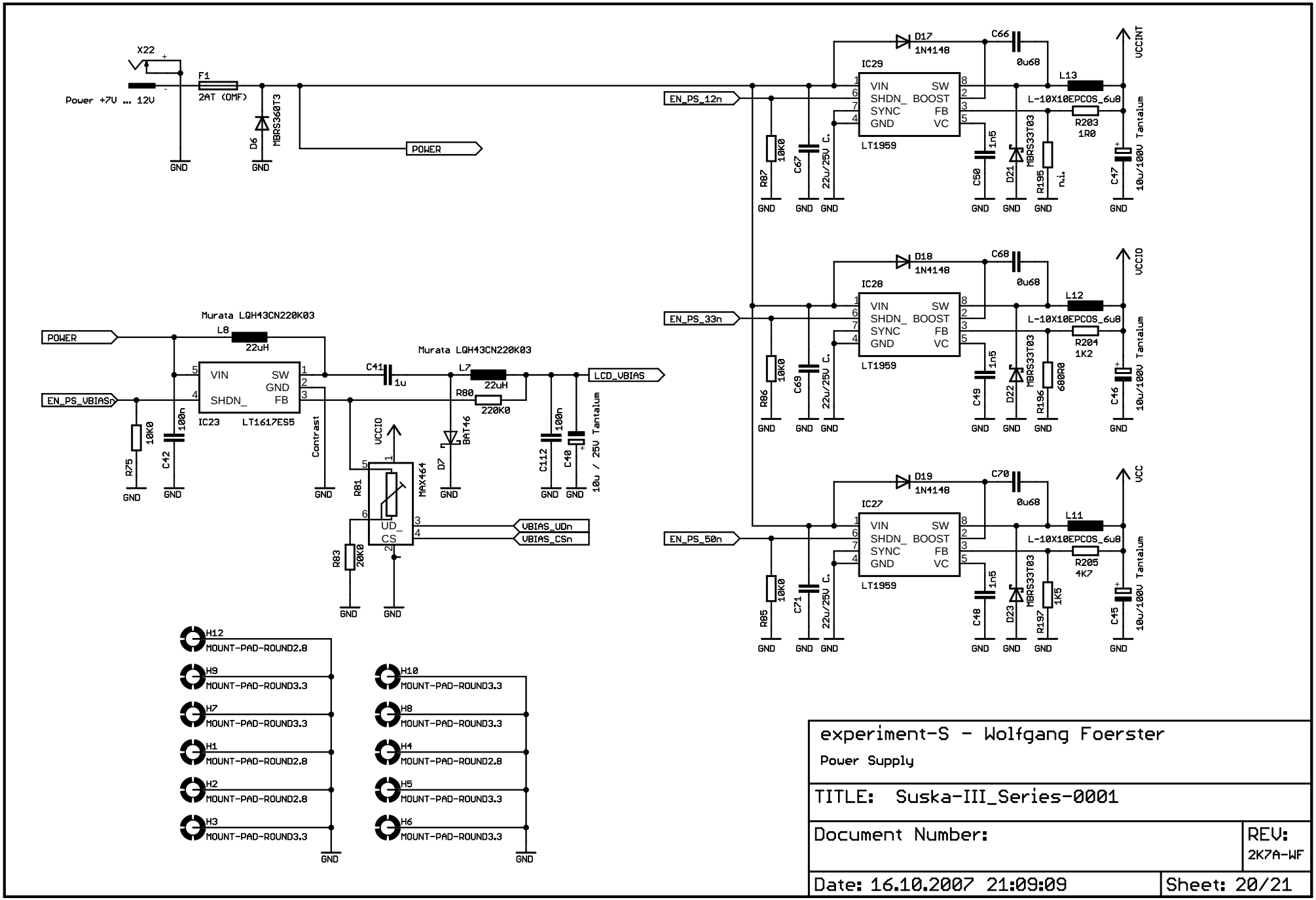
X22
Power +7V ... 12V
F1
2AT (OMF)
D6
MBRS360T3
GND
POWER
EN_PS_12n
EN_PS_33n
EN_PS_50n
D17
1N4148
C66
0u68
IC29
VIN
SHDN_
SYNC
GND
SW
BOOST
FB
VC
LT1959
L13
L-10X10EPCOS_6u8
R203
1R0
VCCINT
R87
10K0
C67
22u/25V C.
C50
1n5
D21
MBRS33T03
R195
n.i.
C47
10u/100V Tantalum
D18
1N4148
C68
0u68
IC28
L12
R204
1K2
VCCIO
R86
10K0
C69
22u/25V C.
C49
1n5
D22
MBRS33T03
R196
680R0
C46
10u/100V Tantalum
D19
1N4148
C70
0u68
IC27
L11
R205
4K7
VCC
R85
10K0
C71
22u/25V C.
C48
1n5
D23
MBRS33T03
R197
1K5
C45
10u/100V Tantalum
Murata LQH43CN220K03
L8
22uH
POWER
EN_PS_VBIASn
IC23
LT1617ES5
VIN
SHDN_
SW
GND
FB
R75
10K0
C42
100n
Contrast
C41
1u
Murata LQH43CN220K03
L7
22uH
R80
220K0
LCD_VBIAS
VCCIO
R81
MAX464
UD_
CS
R83
20K0
D7
BAT46
C112
100n
C40
10u / 25V Tantalum
VBIAS_UDn
VBIAS_CSn
H12
MOUNT-PAD-ROUND2.8
H9
MOUNT-PAD-ROUND3.3
H7
MOUNT-PAD-ROUND3.3
H1
MOUNT-PAD-ROUND2.8
H2
MOUNT-PAD-ROUND2.8
H3
MOUNT-PAD-ROUND3.3
H10
MOUNT-PAD-ROUND3.3
H8
MOUNT-PAD-ROUND3.3
H4
MOUNT-PAD-ROUND2.8
H5
MOUNT-PAD-ROUND3.3
H6
MOUNT-PAD-ROUND3.3
experiment-S - Wolfgang Foerster
Power Supply
TITLE: Suska-III_Series-0001
Document Number:
REV:
2K7A-WF
Date: 16.10.2007 21:09:09
Sheet: 20/21

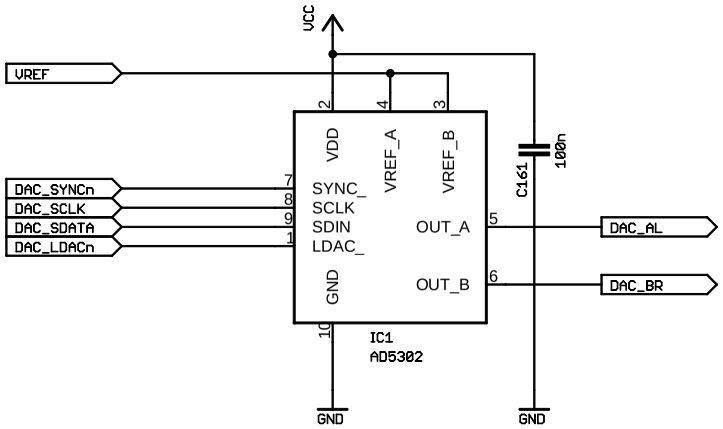

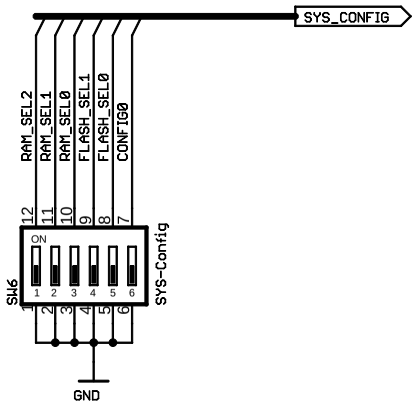

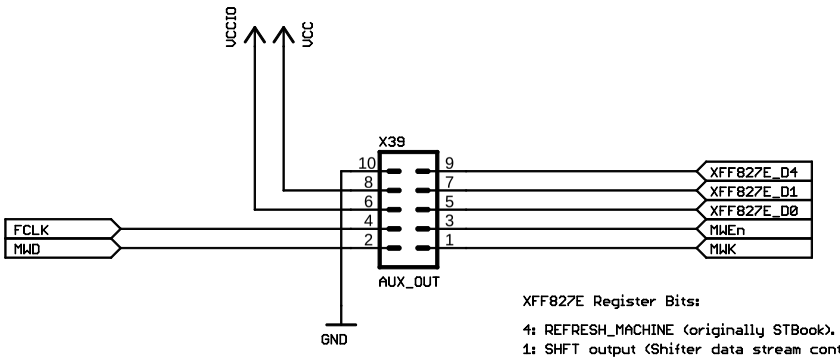

XFF827E Register Bits:

4: REFRESH_MACHINE (originally STBook).
1: SHFT output (Shifter data stream control, STBook).
0: SHADOW chip off (STBook).

experiment-S - Wolfgang Foerster Audio-DA-Converter, Spares	
TITLE: Suska-III_Series-0001	
Document Number:	REV: 2K7A-WF
Date: 16.10.2007 21:09:09	Sheet: 21/21