Table of Contents

Table of Contents . . . . . Sheet 1A

TX-1 Main Wiring Diagram (042048-01 A) . . . . . Sheet 1B

TX-1 Audio PCB Schematic Diagram (042016-01 A) . . . . . Sheet 2A

TX-1 Power Supply Wiring Diagram (042080-01 A) . . . . . Sheet 2B

TX-1 12 V Power Supply Wiring Diagram (A042033-01 A) . . . . . Sheet 3A

TX-1 Game Interfaces . . . . . Sheet 3B
- Fluorescent Light Wiring Diagram (035833-01 A)
- Coin Door Wiring Diagram (A037542-01 E)
- Utility Panel Wiring Diagram (A038004-01 F)

TX-1 Main PCB Schematic Diagrams (A0420018-21 A) . . . . . Sheets 1–13

TX-1 Graphics PCB Schematic Diagrams (A042019-21 A) . . . . . Sheets 1–15

TX-1 Sound PCB Schematic Diagrams (A042020-21 A) . . . . . Sheets 1–4

TX-1 EMI Shield PCB Schematic Diagram (A042403-01 A) . . . . . Sheet 1

NOTE

This staple temporarily holds the schematic package together. Remove the staple before using these schematics.

Schematic Package Supplement to

*

Operators Manual

*TX-1 is created by Tatsumi, manufactured by Atari, Inc. TM and © Namco 1983 in Western Hemisphere. All rights reserved.
TM and © Taito 1983 in entire world except Japan and Western Hemisphere. All rights reserved.

3N

A Warner Communications Company

SP-262 Sheet 1A
1st printing

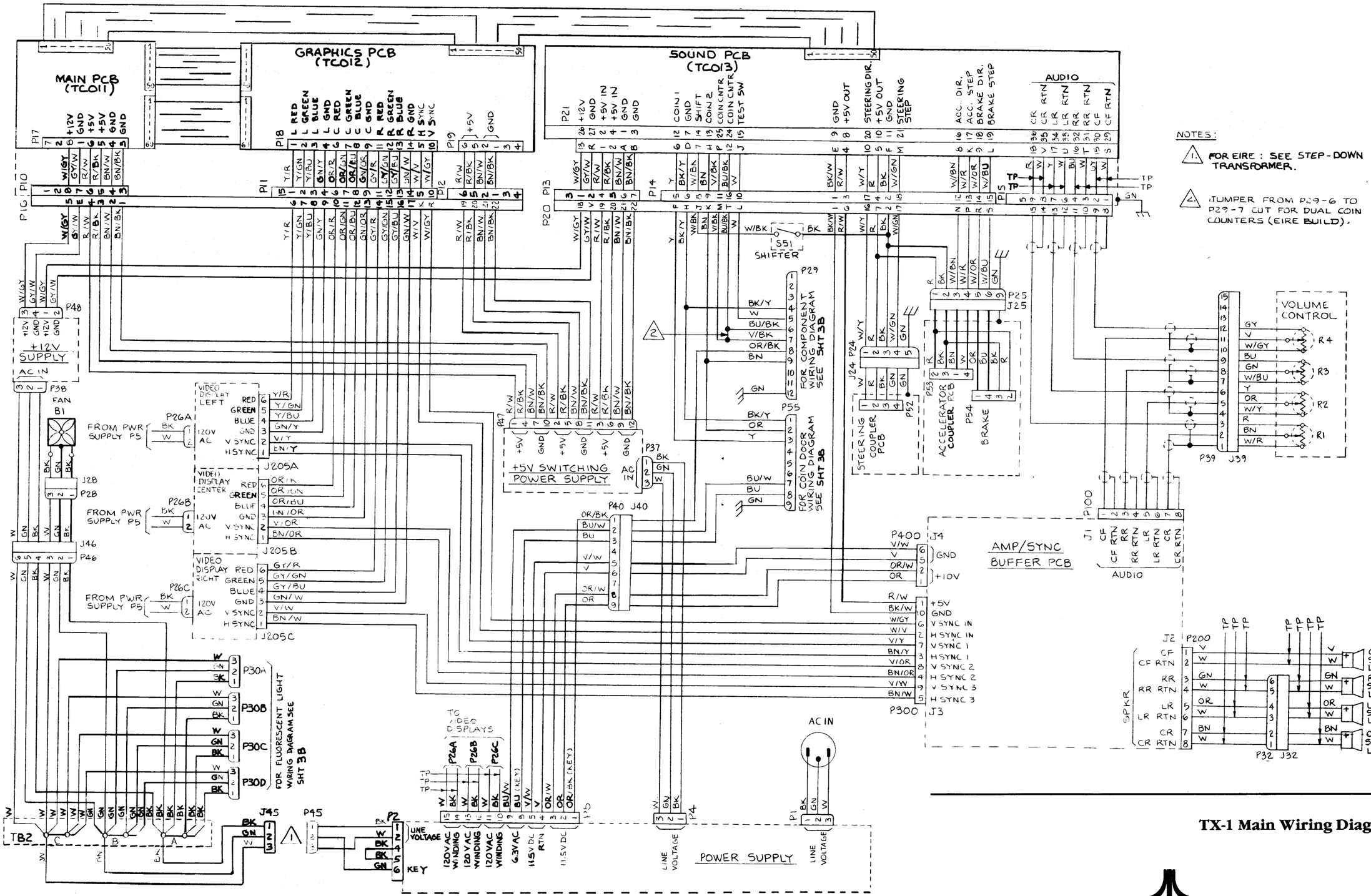

TX-1 Main Wiring Diagram

ATARI
A Warner Communications Company
© ATARI INC. 1984
SP-262 Sheet 1B
1st printing

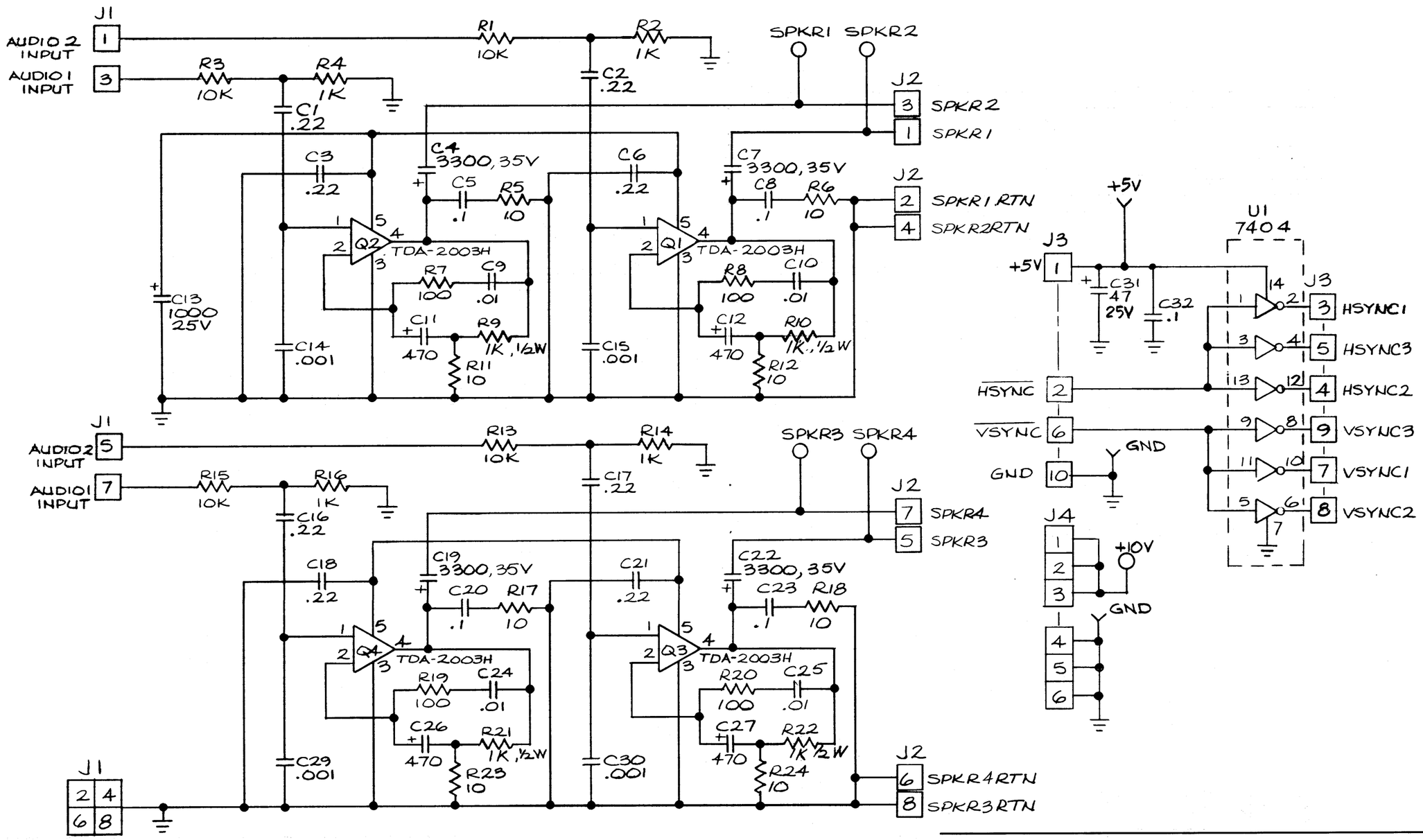

TX-1 Audio PCB Schematic Diagram

ATARI
A Warner Communications Company

© ATARI INC. 1984

SP-262 Sheet 2A
1st printing

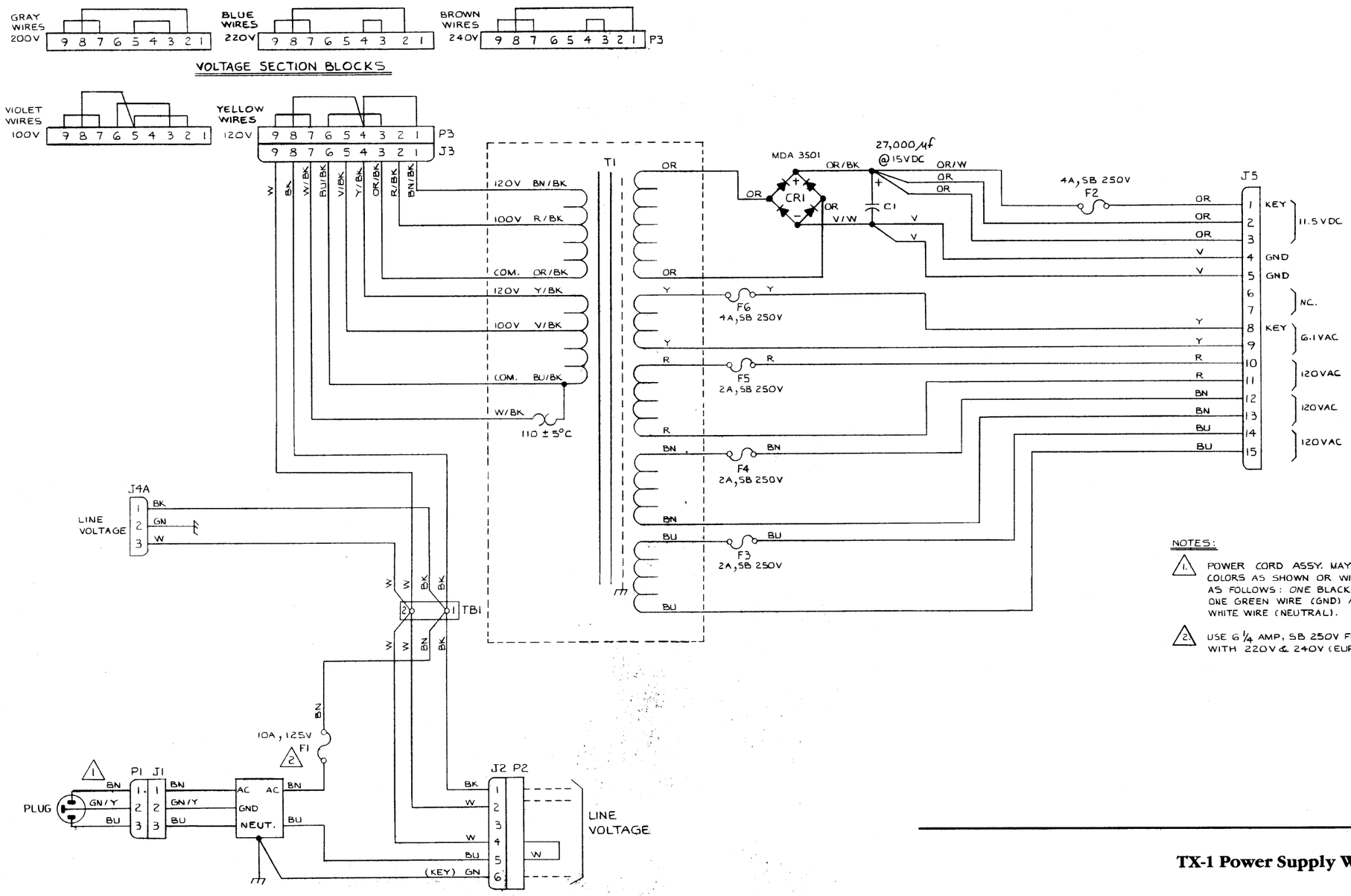

NOTES:

1. POWER CORD ASSY. MAY HAVE WIRE COLORS AS SHOWN OR WIRE COLORS AS FOLLOWS: ONE BLACK WIRE (AC), ONE GREEN WIRE (GND) AND ONE WHITE WIRE (NEUTRAL).

2. USE 6 1/4 AMP, SB 250V FUSE AT F1 WITH 220V & 240V (EUROPEAN ONLY).

TX-1 Power Supply Wiring Diagram

ATARI®
A Warner Communications Company

© ATARI INC. 1984

SP-262 Sheet 2B
1st printing

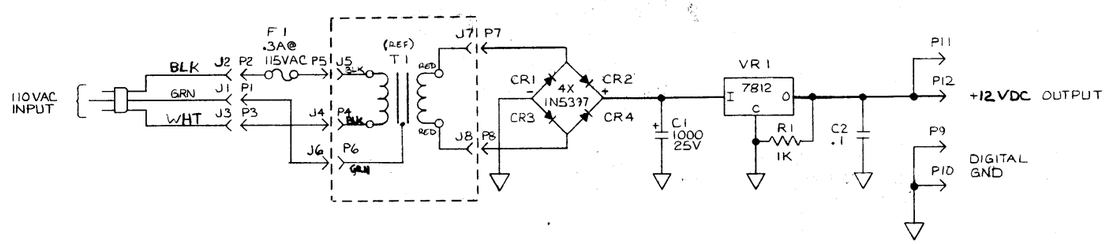

TX-1 12V Power Supply Wiring Diagram

ATARI®
A Warner Communications Company

© ATARI INC. 1984

SP-262 Sheet 3A
1st printing

Utility Panel Wiring Diagram

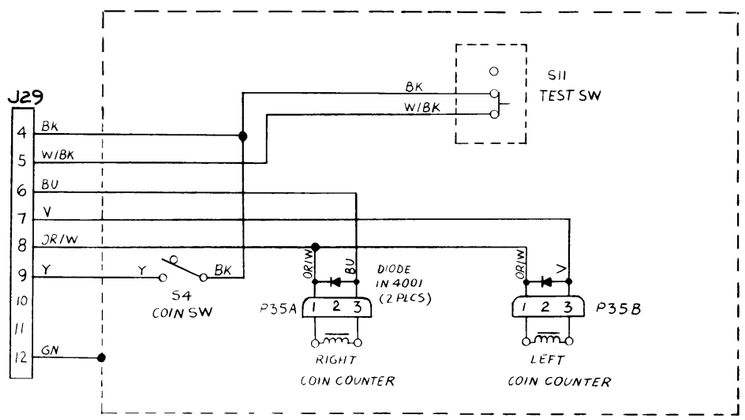

Fluorescent Light Wiring Diagram

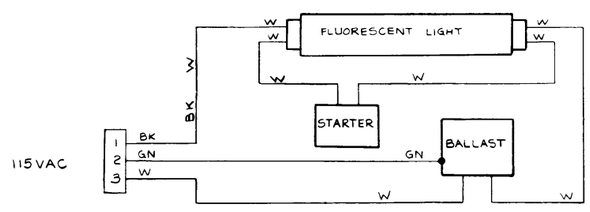

Coin Door Wiring Diagram

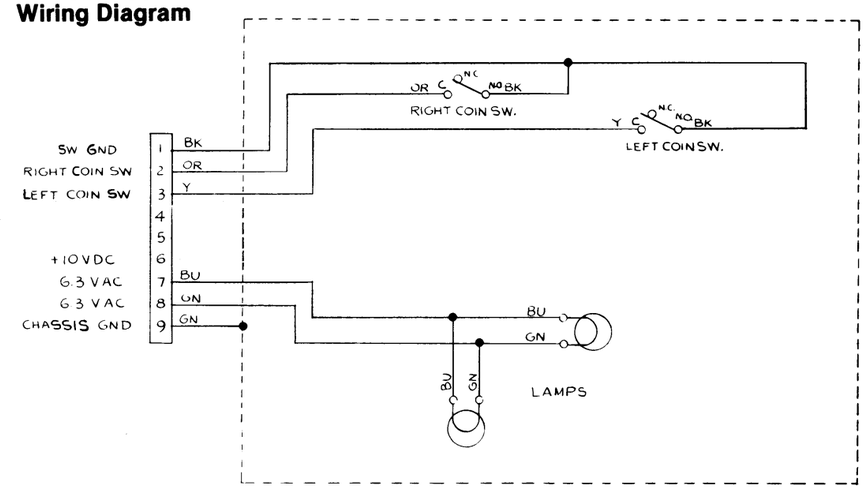

TX-1 Game Interfaces

ATARI®
A Warner Communications Company

© ATARI INC. 1984

SP-262 Sheet 3B
1st printing

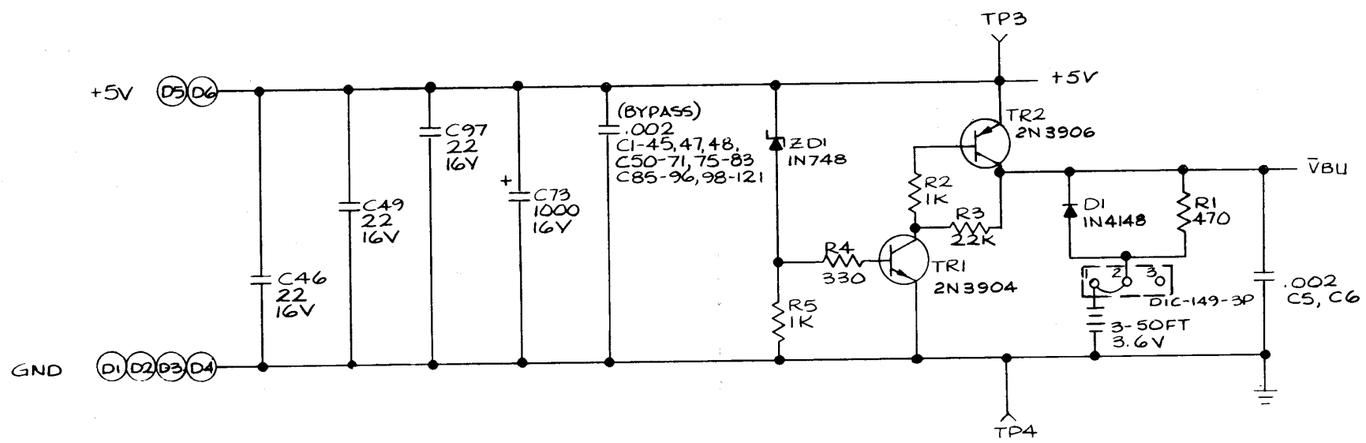

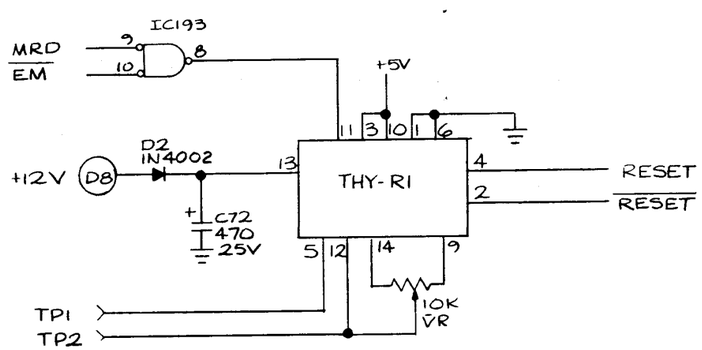

TX-1 Main PCB
(TC011)

ATARI®
A Warner Communications Company

© ATARI INC. 1984

SP-262 Sheet 1 of Main
1st printing

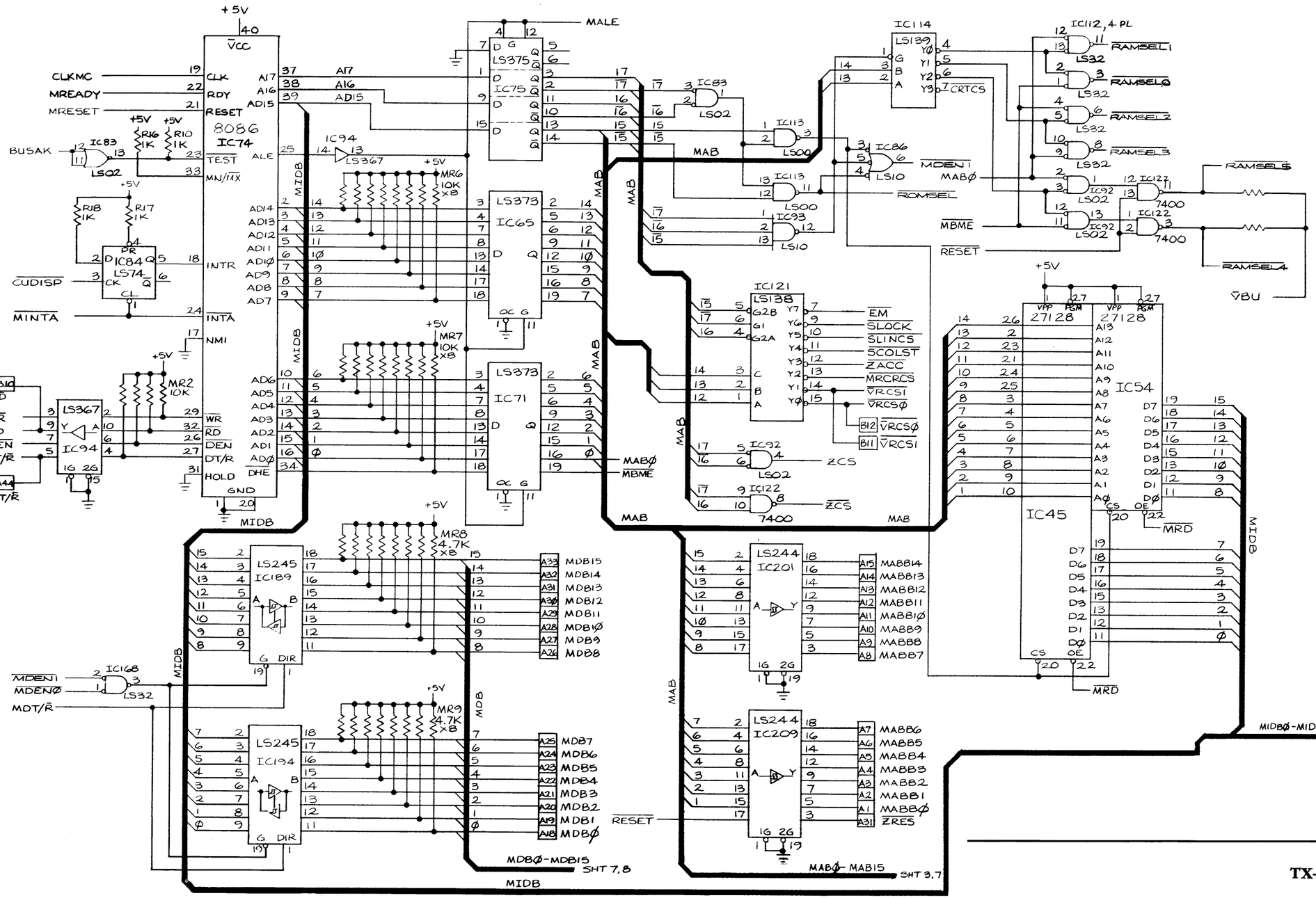

TX-1 Main PCB
(TC011)

ATARI®
A Warner Communications Company

© ATARI INC. 1984

SP-262 Sheet 2 of Main
1st printing

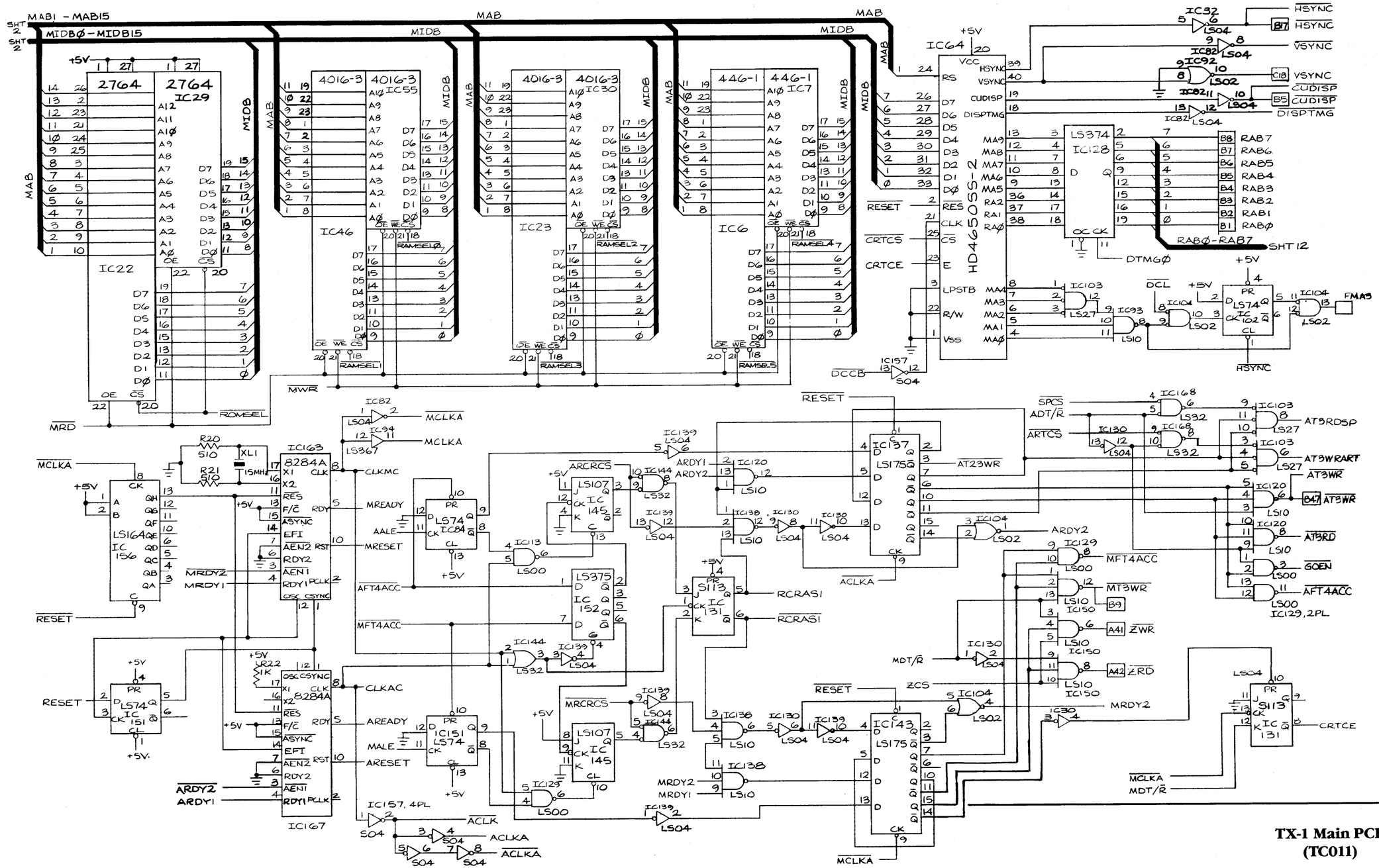

TX-1 Main PCB
(TC011)

ATARI®
A Warner Communications Company

© ATARI INC. 1984

SP-262 Sheet 3 of Main
1st printing

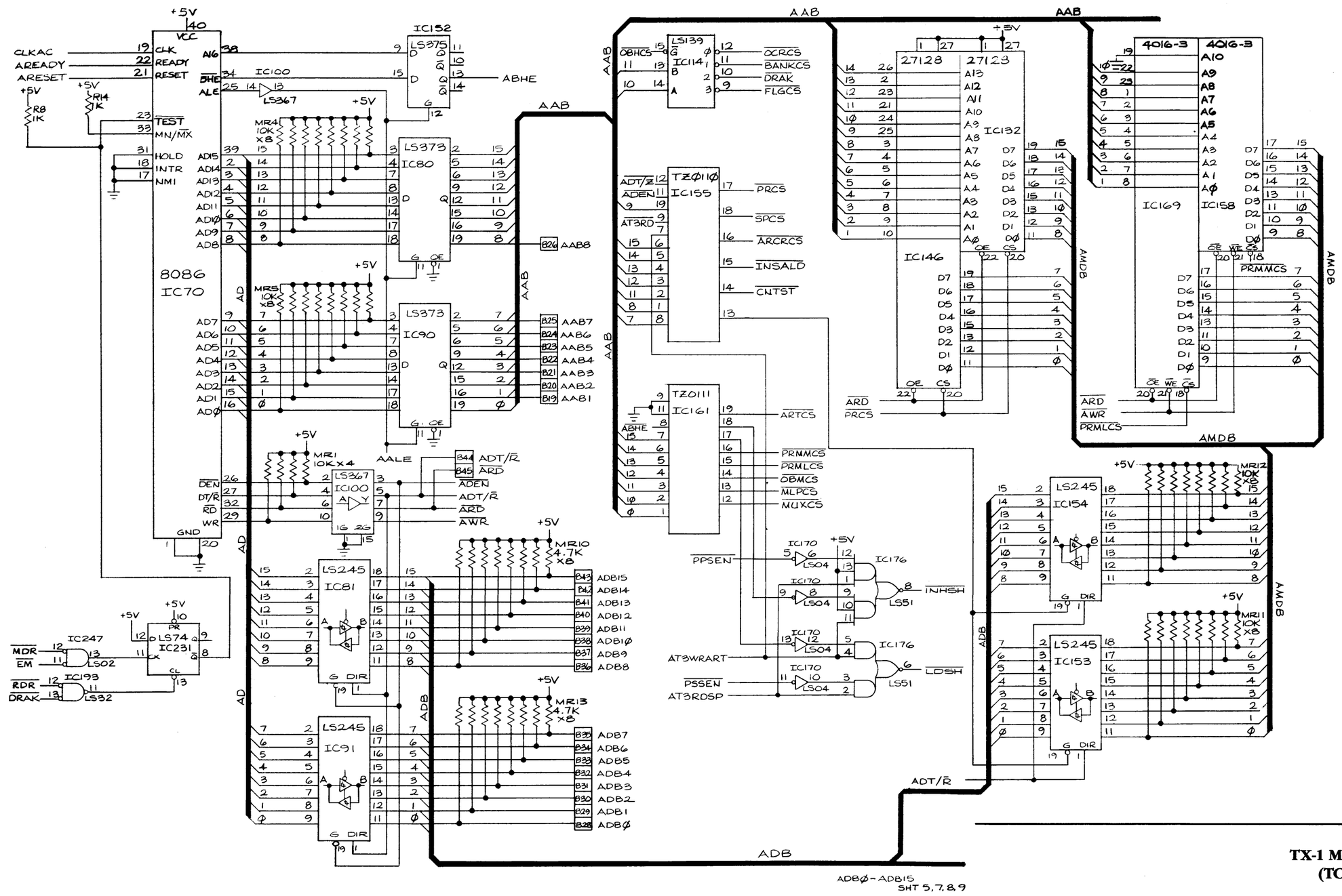

TX-1 Main PCB
(TC011)

ATARI
A Warner Communications Company

© ATARI INC. 1984

SP-262 Sheet 4 of Main
1st printing

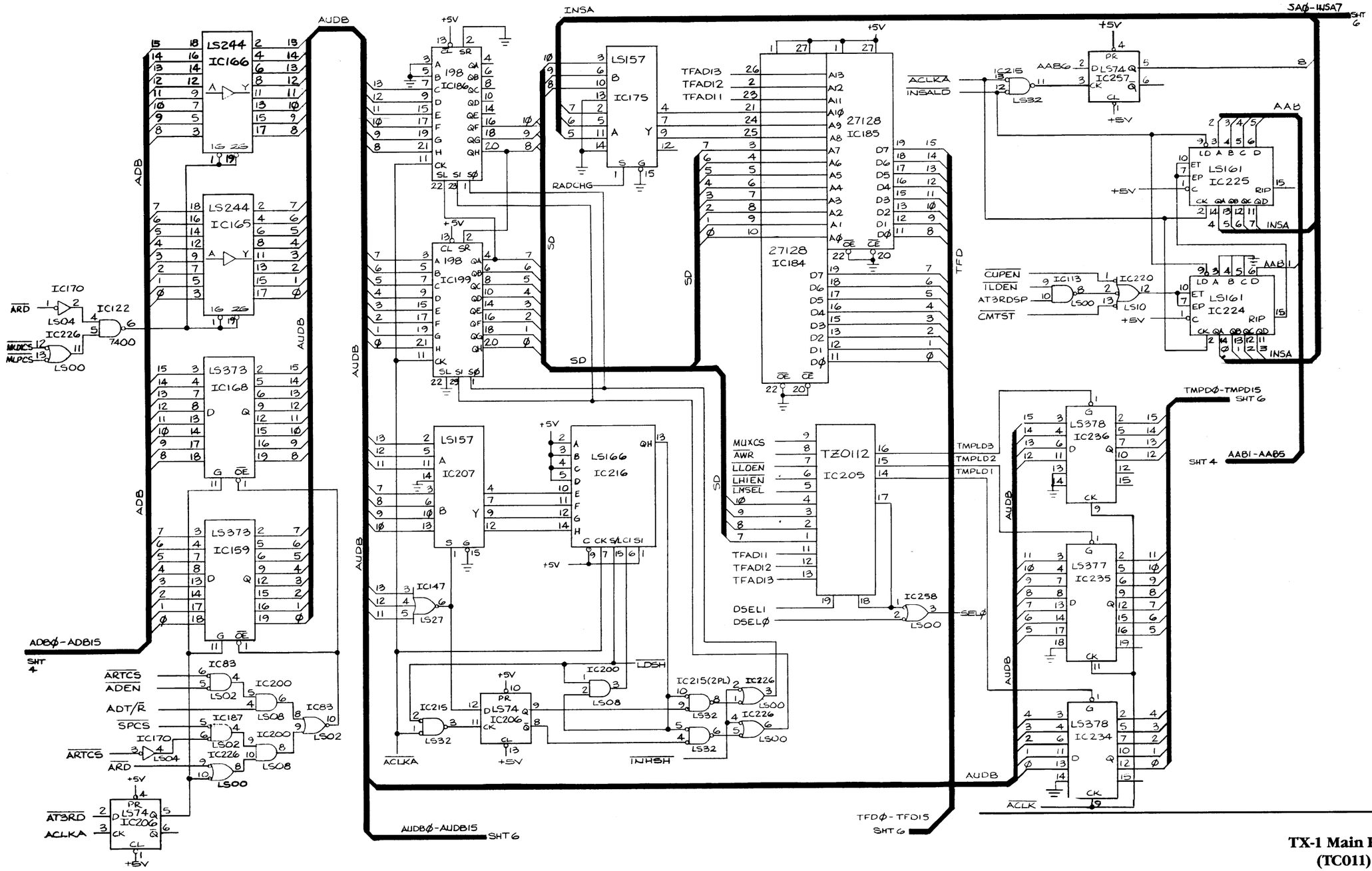

TX-1 Main PCB
(TC011)

ATARI®
A Warner Communications Company

© ATARI INC. 1984

SP-262 Sheet 5 of Main
1st printing

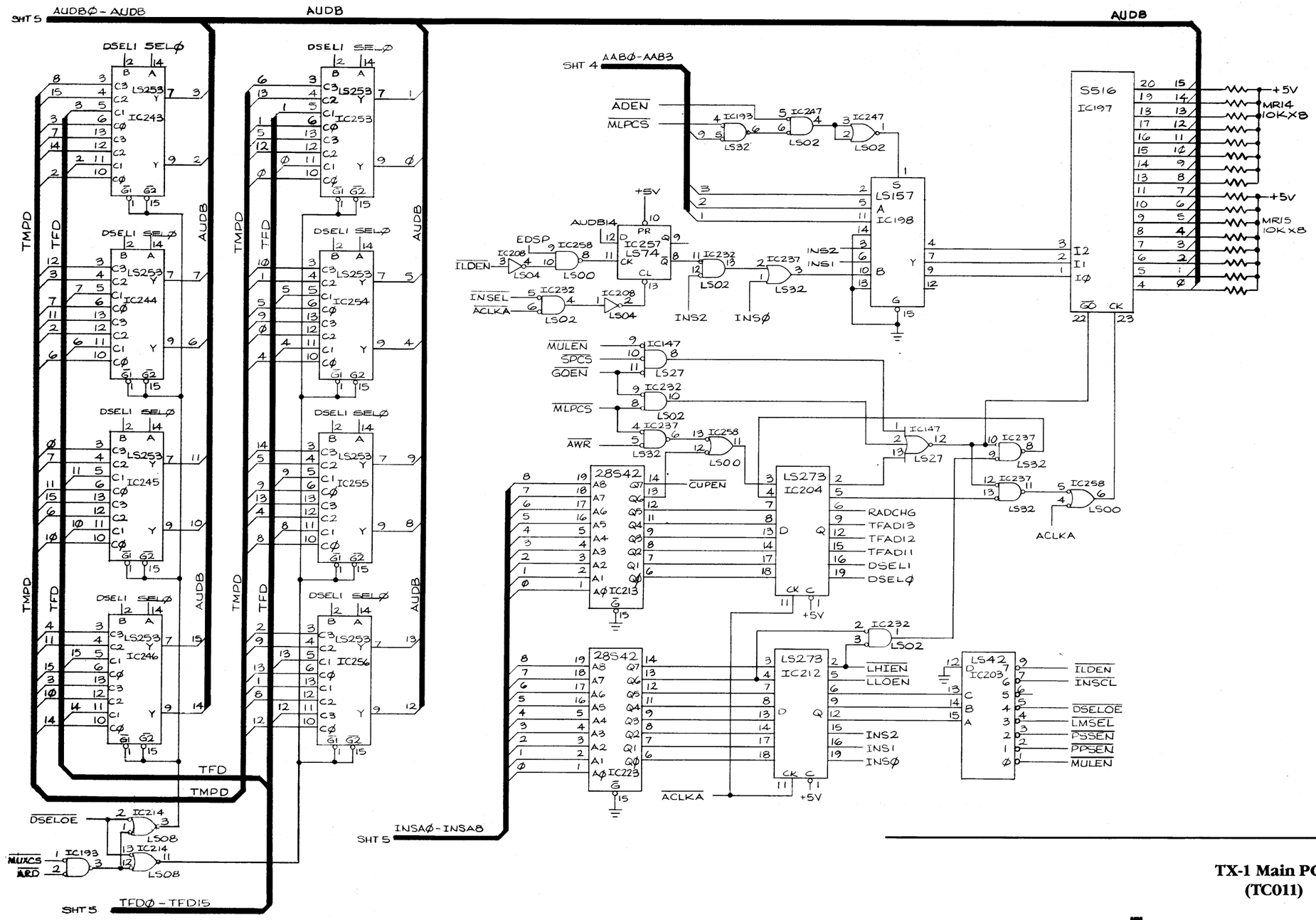

TX-1 Main PCB
(TC011)

ATARI®
A Warner Communications Company

© ATARI INC. 1984

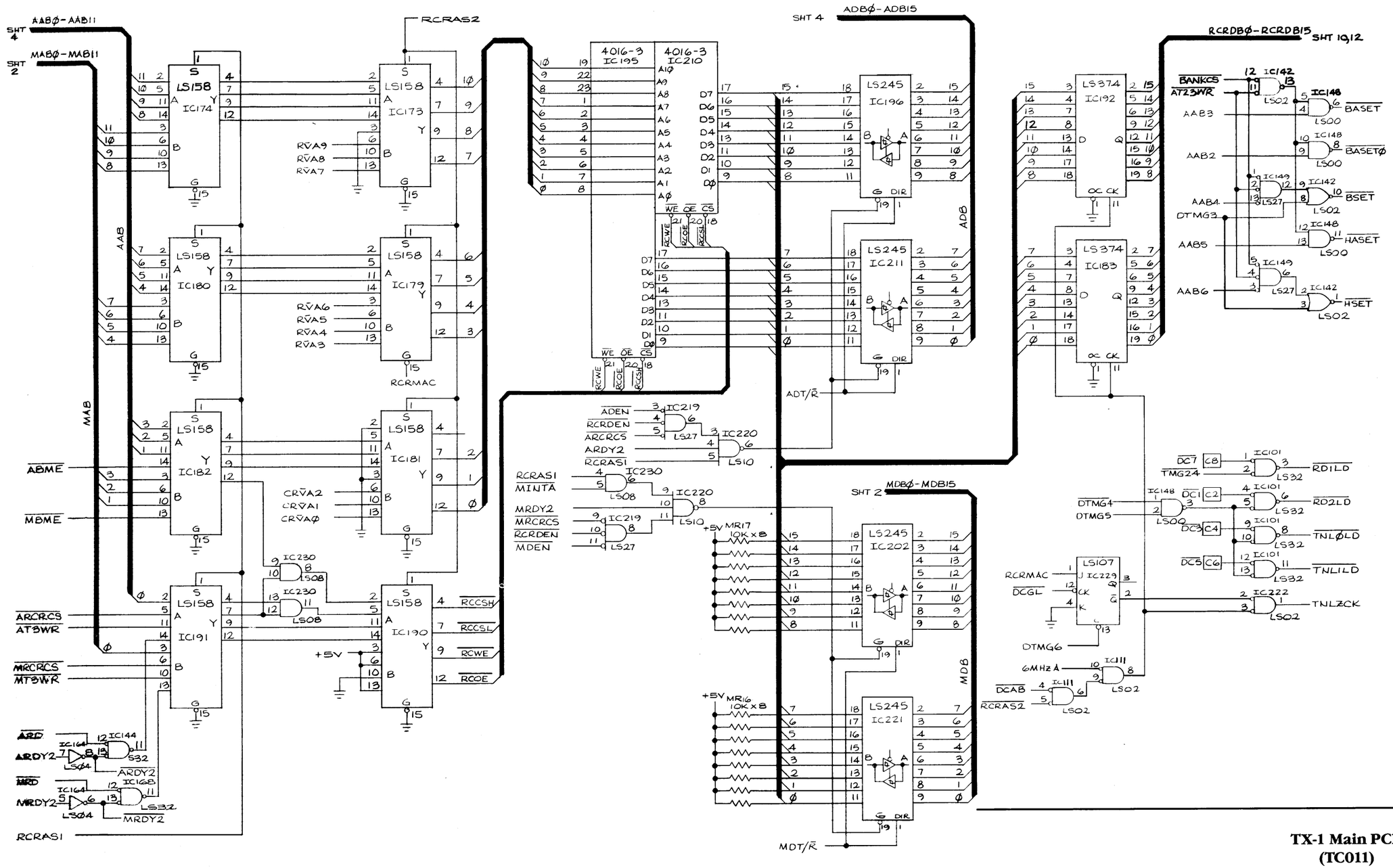

TX-1 Main PCB
(TC011)

ATARI
A Warner Communications Company

© ATARI INC. 1984

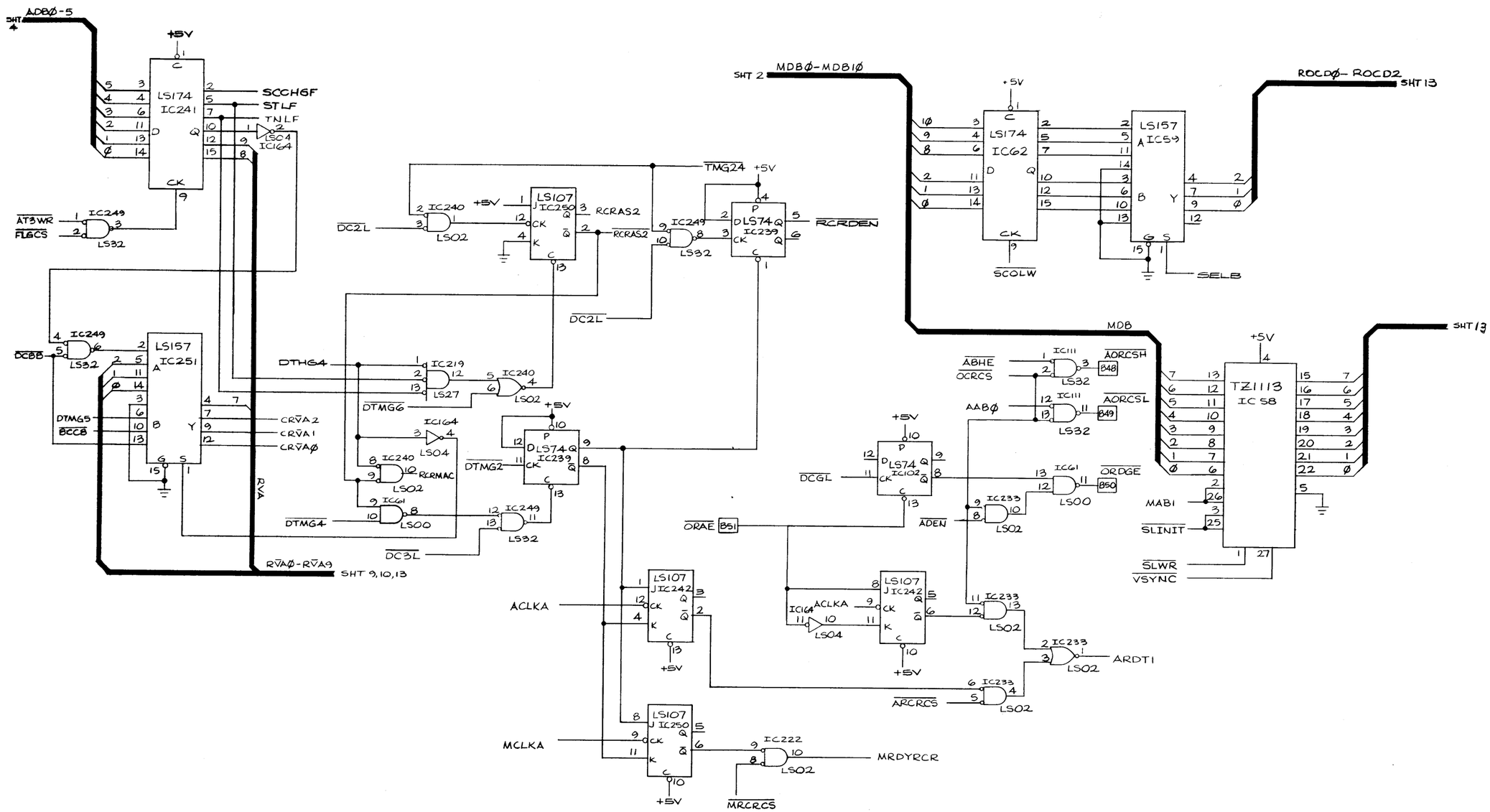

TX-1 Main PCB
(TC011)

ATARI®
A Warner Communications Company

© ATARI INC. 1984

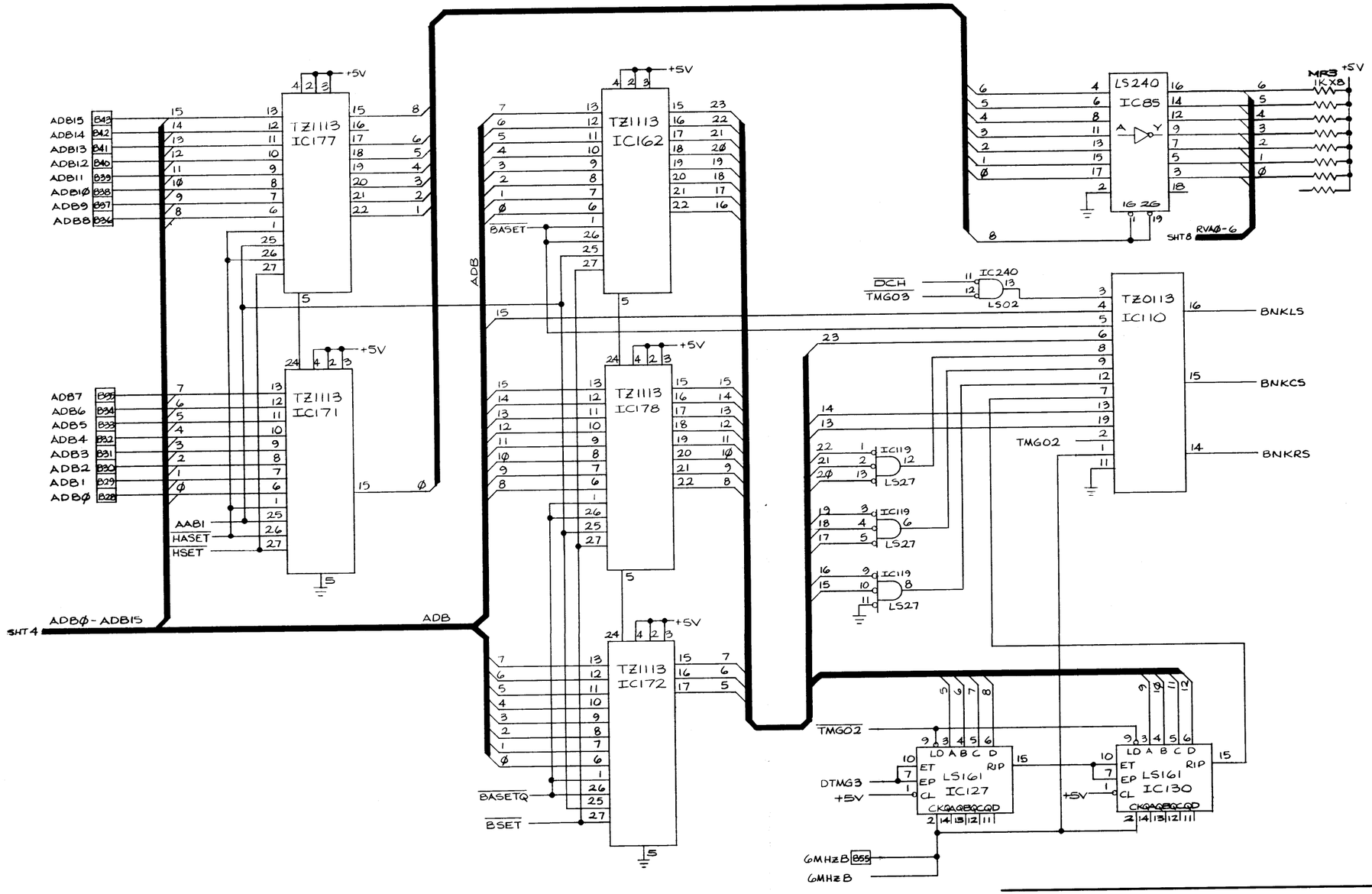

TX-1 Main PCB
(TC011)

ATARI
A Warner Communications Company

© ATARI INC. 1984

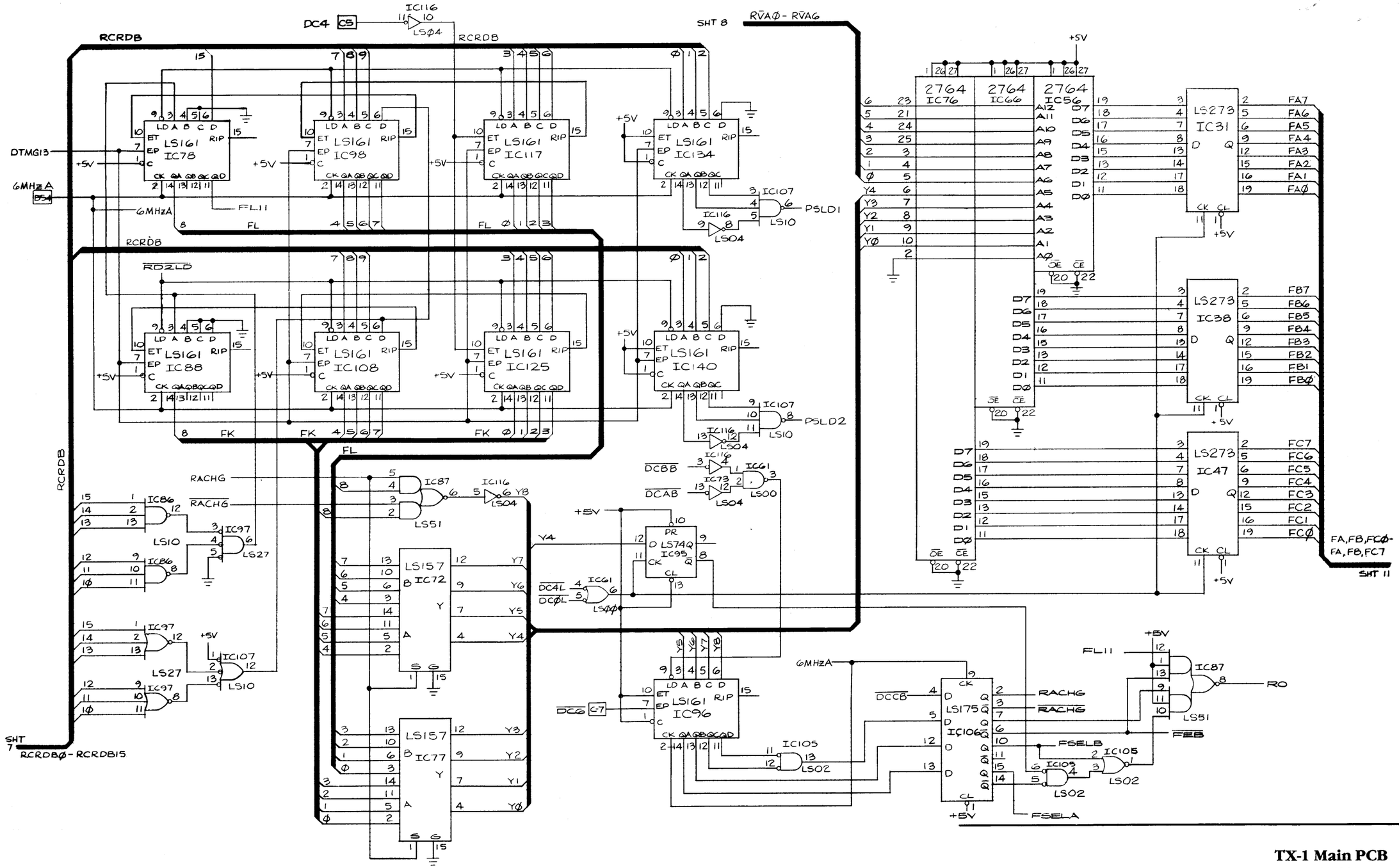

TX-1 Main PCB
(TC011)

ATARI
A Warner Communications Company

© ATARI INC. 1984

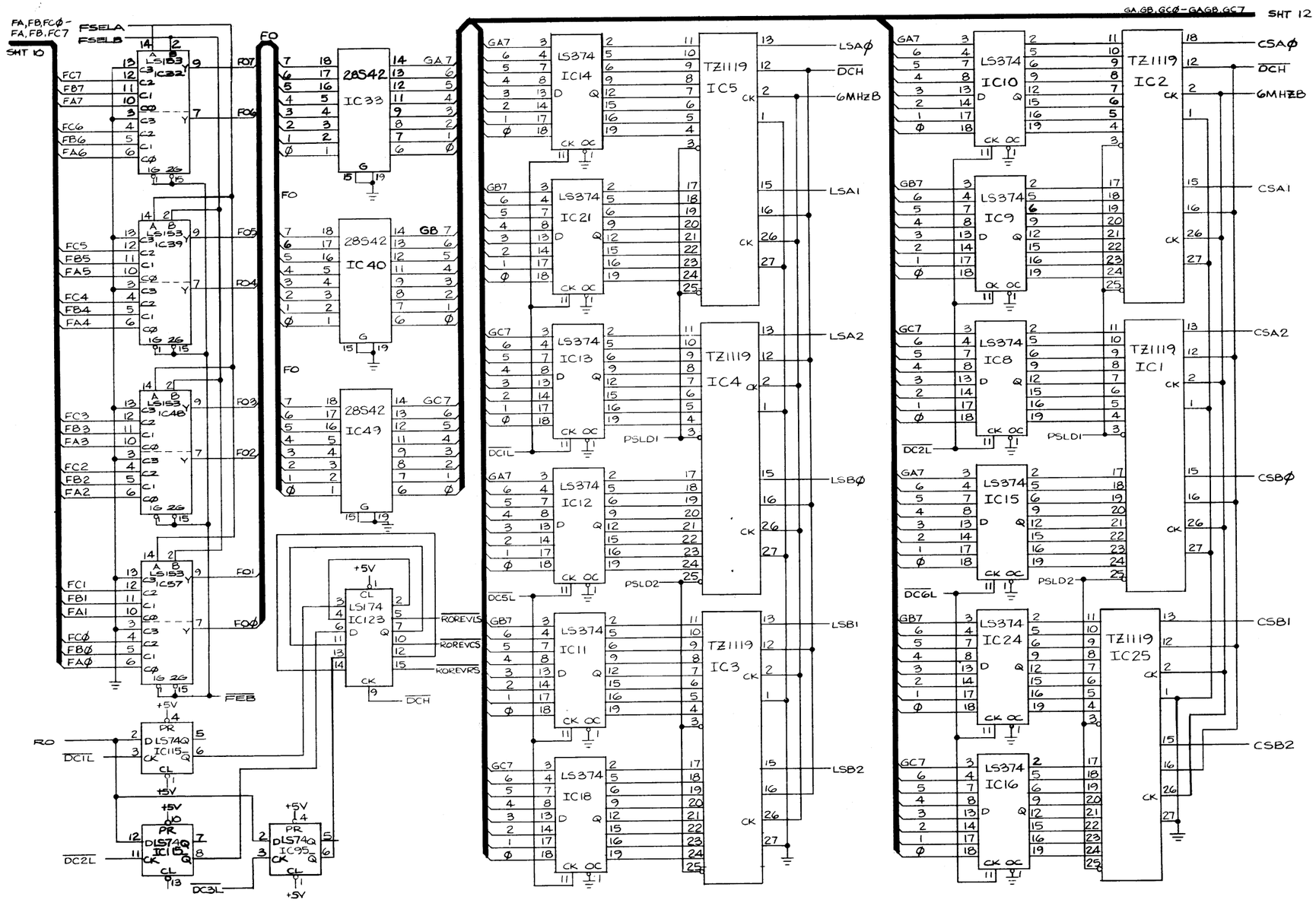

TX-1 Main PCB
(TC011)

ATARI®
A Warner Communications Company

© ATARI INC. 1984

SP-262 Sheet 11 of Main
1st printing

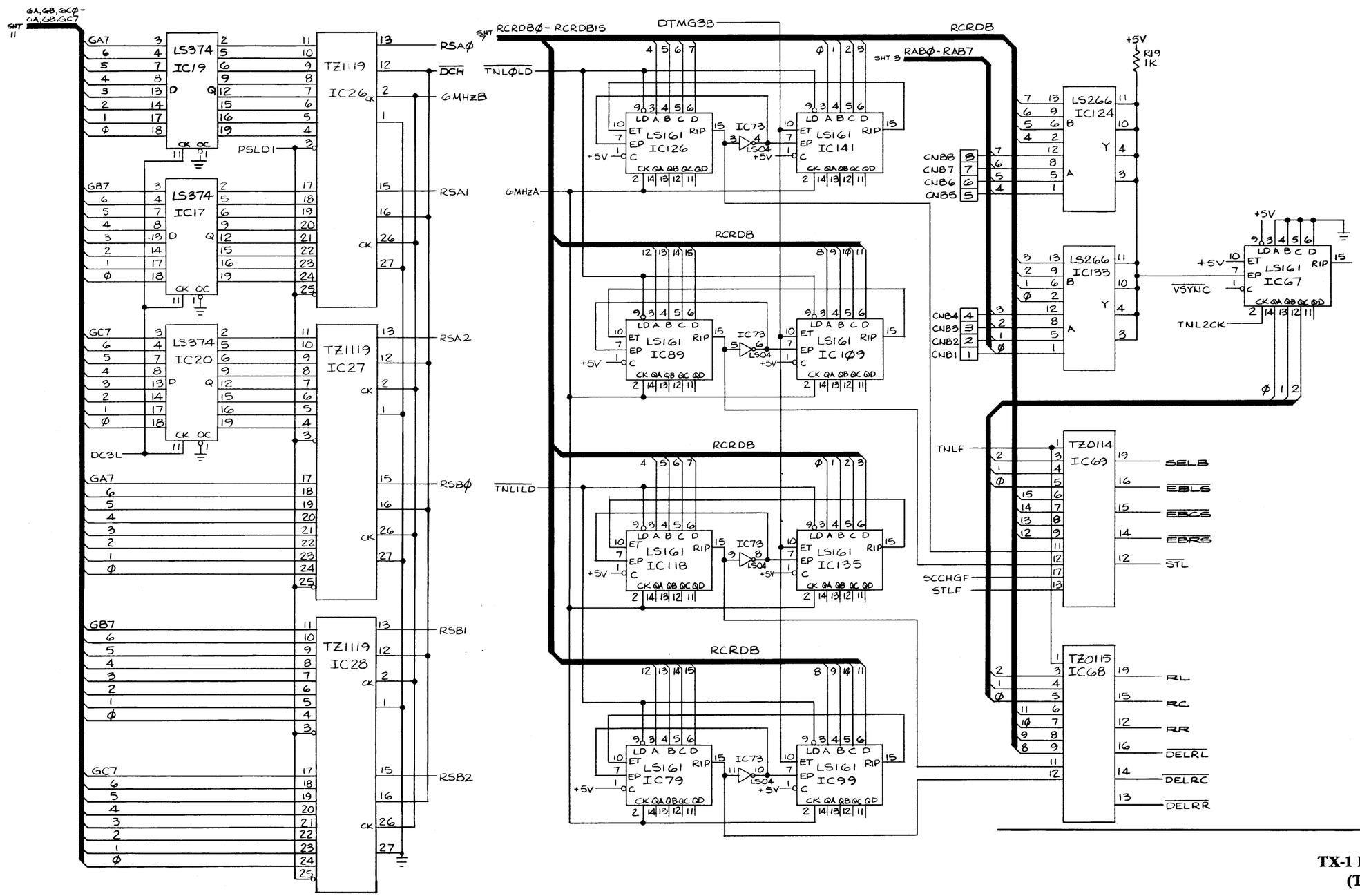

TX-1 Main PCB
(TC011)

ATARI®
A Warner Communications Company

© ATARI INC. 1984

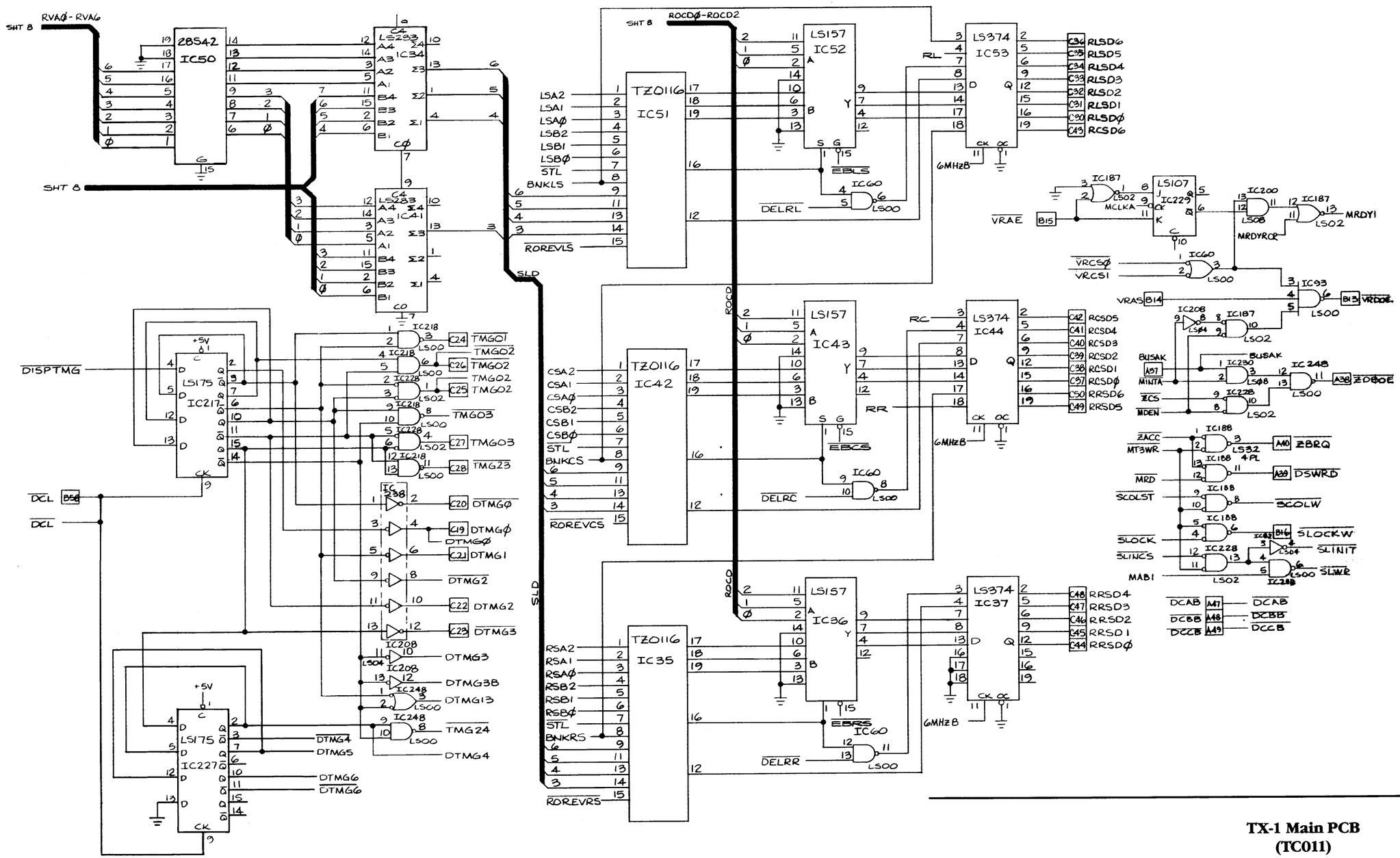

TX-1 Main PCB
(TC011)

ATARI®
A Warner Communications Company

© ATARI INC. 1984

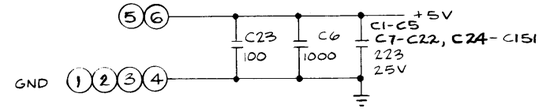

TX-1 Graphics PCB
(TC012)

ATARI®
A Warner Communications Company

© ATARI INC. 1984

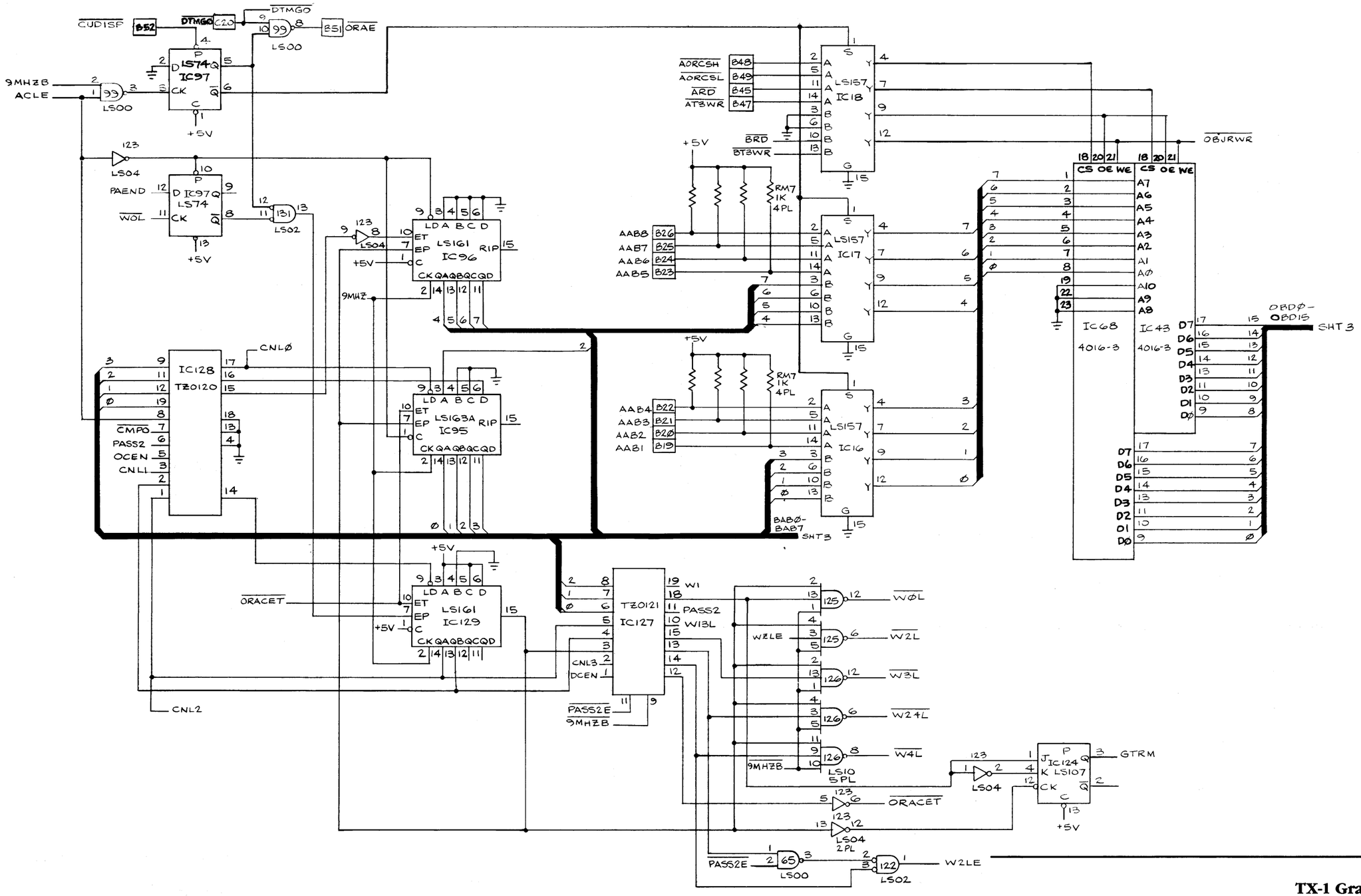

TX-1 Graphics PCB
(TC012)

ATARI®
A Warner Communications Company

© ATARI INC. 1984

SP-262 Sheet 2 of Graphics
1st printing

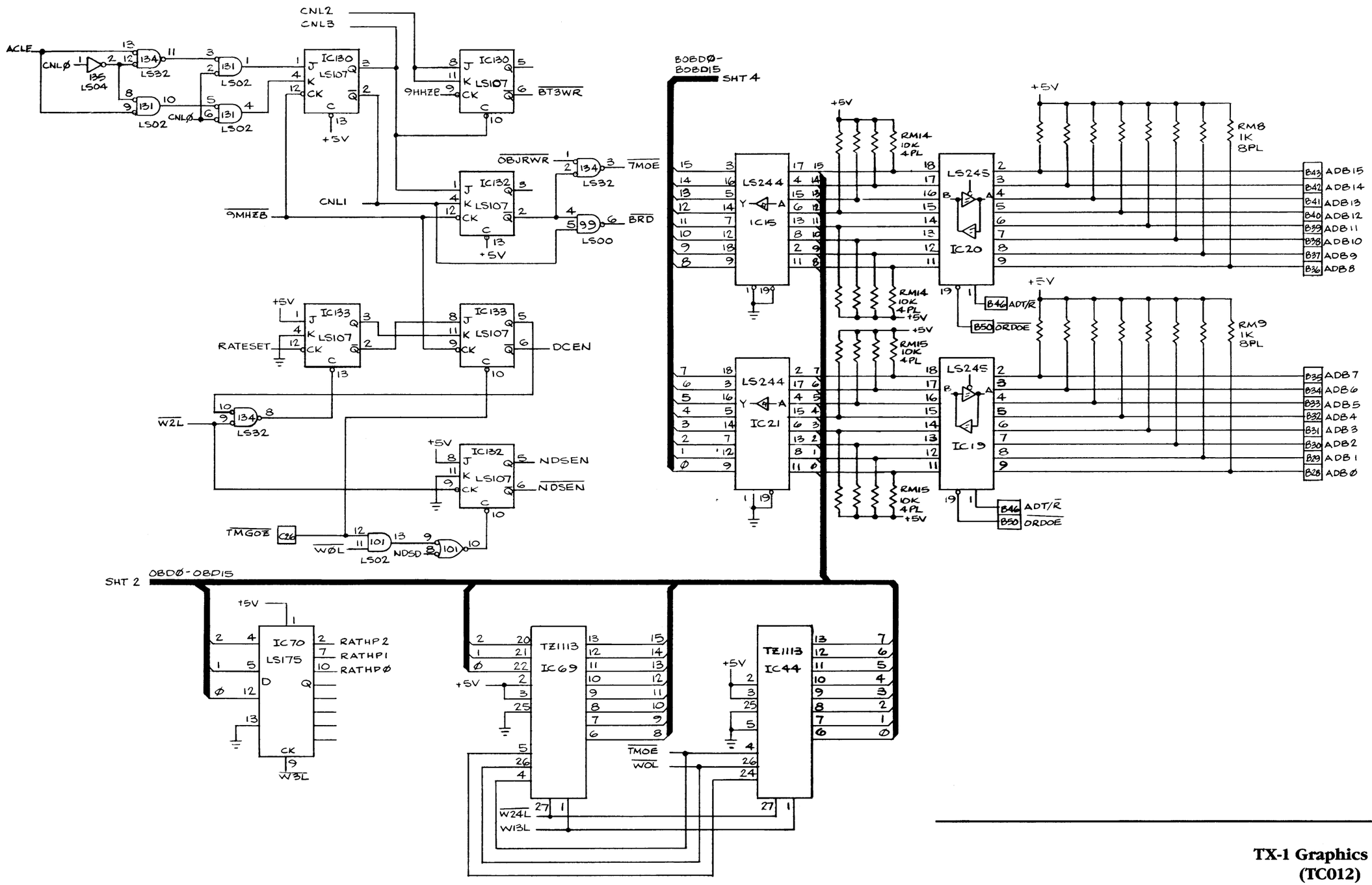

TX-1 Graphics PCB
(TC012)

ATARI®
A Warner Communications Company

© ATARI INC. 1984

SP-262 Sheet 3 of Graphics
1st printing

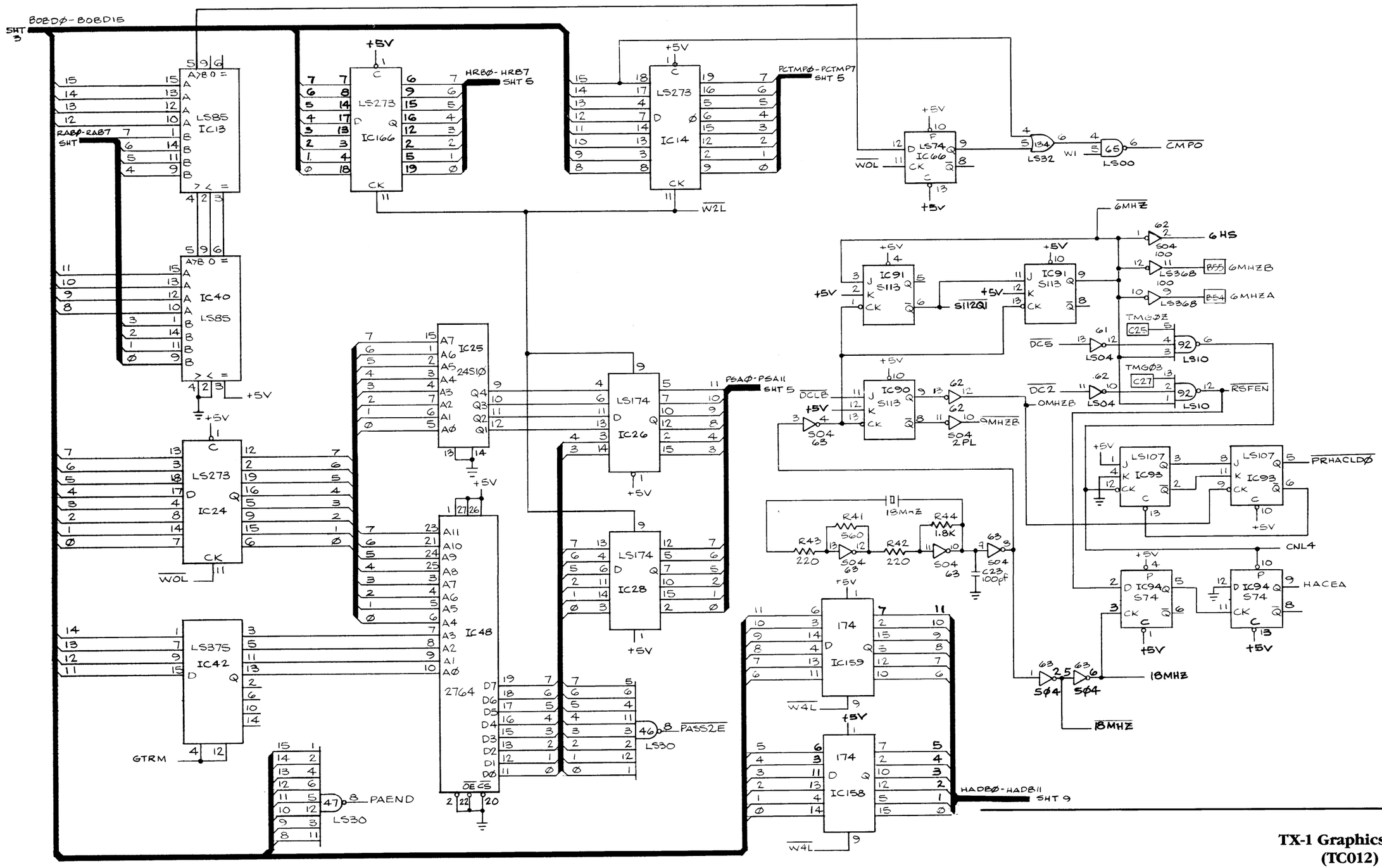

TX-1 Graphics PCB
(TC012)

ATARI®
A Warner Communications Company

© ATARI INC. 1984

SP-262 Sheet 4 of Graphics
1st printing

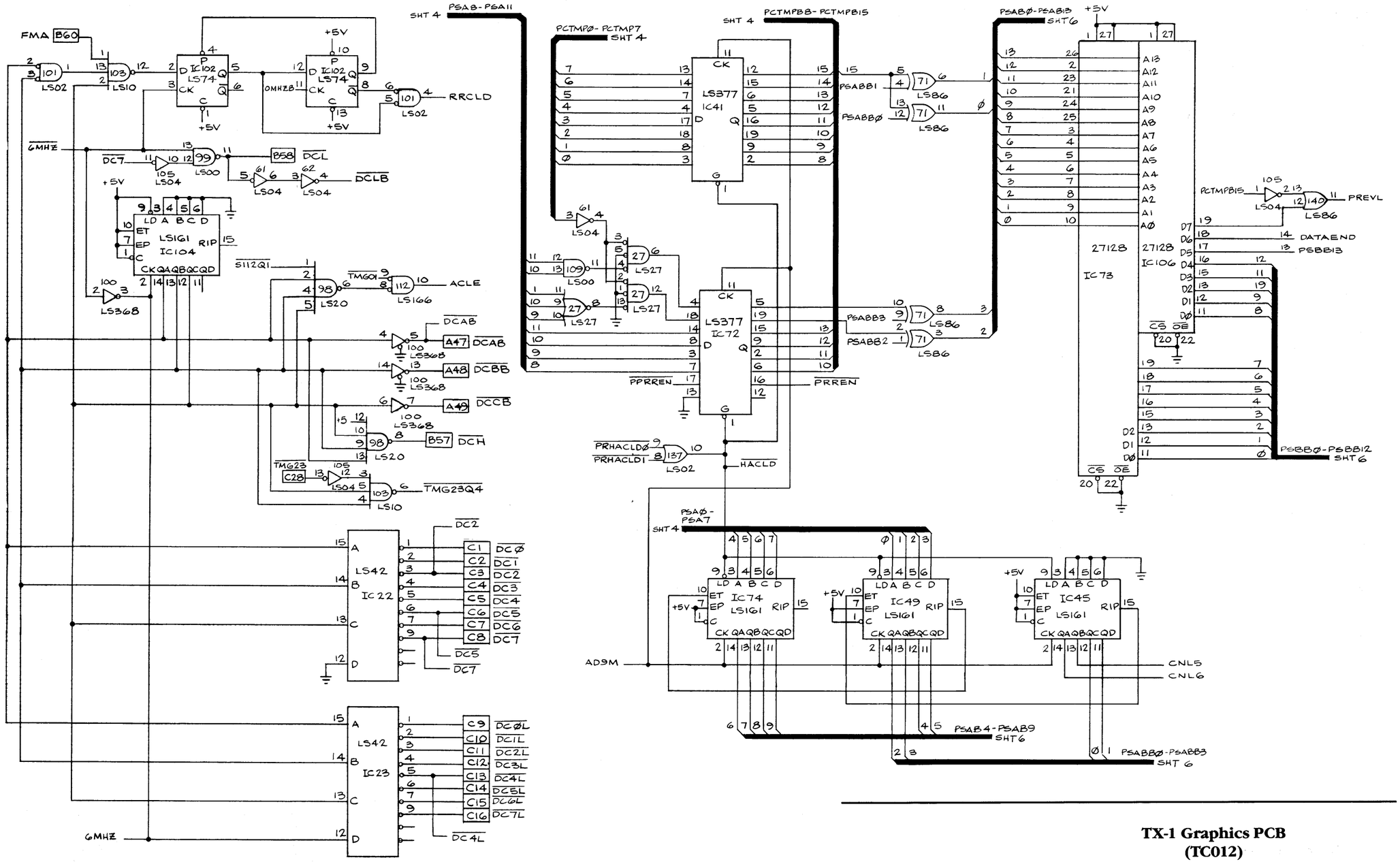

TX-1 Graphics PCB
(TC012)

ATARI®
A Warner Communications Company

© ATARI INC. 1984

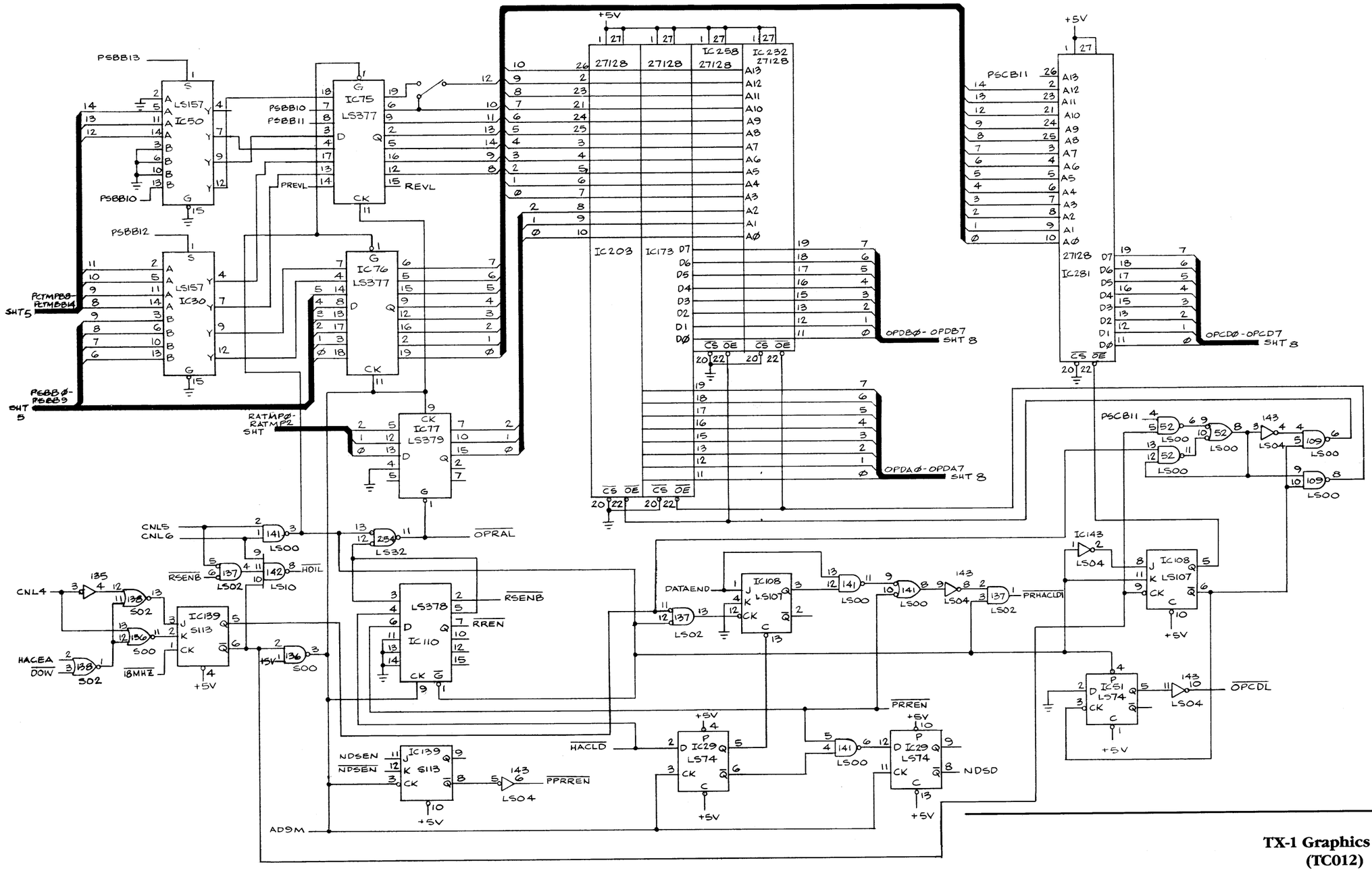

TX-1 Graphics PCB
(TC012)

ATARI
A Warner Communications Company

© ATARI INC. 1984

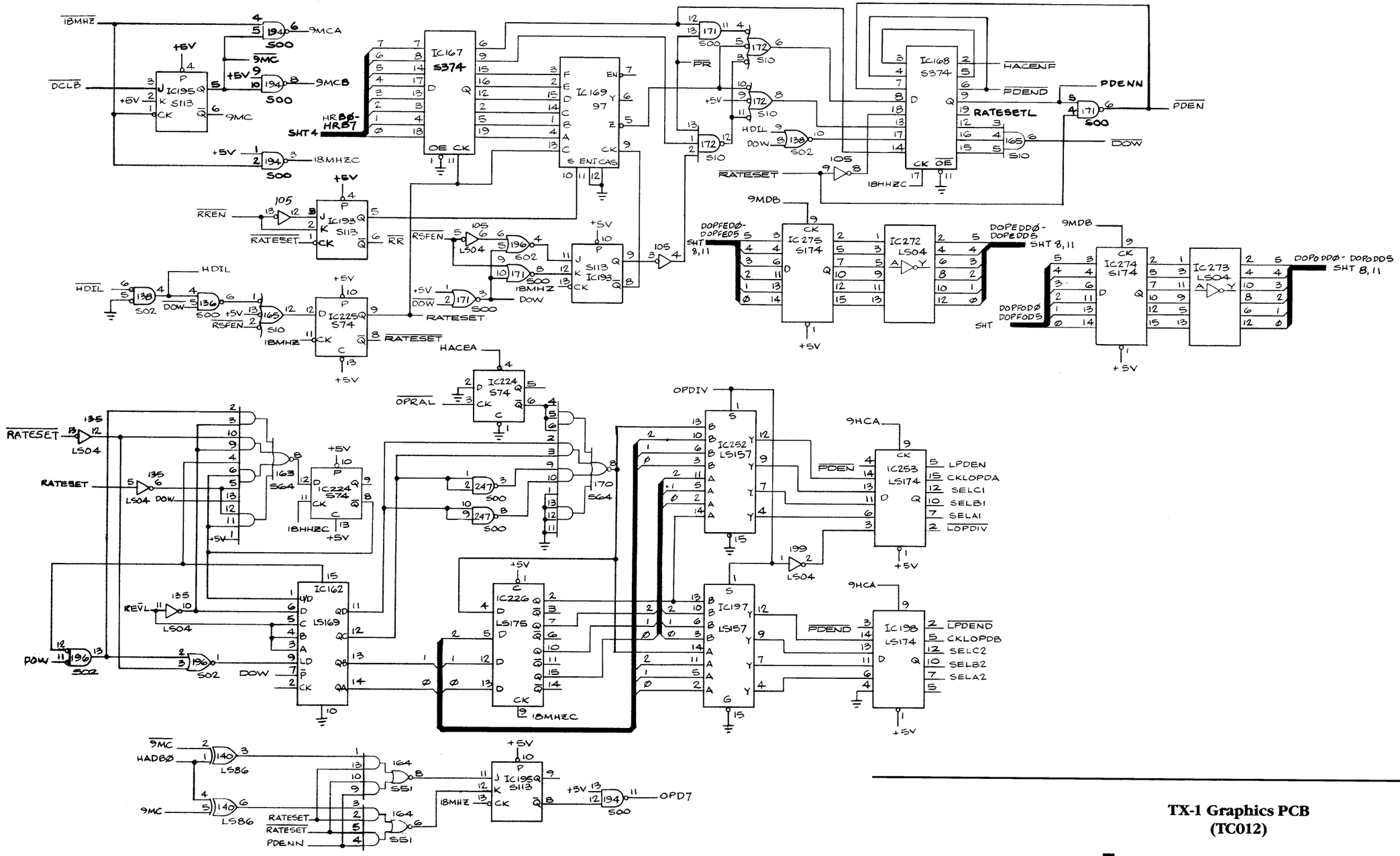

TX-1 Graphics PCB
(TC012)

ATARI®
A Warner Communications Company

© ATARI INC. 1984

SP-262 Sheet 7 of Graphics
1st printing

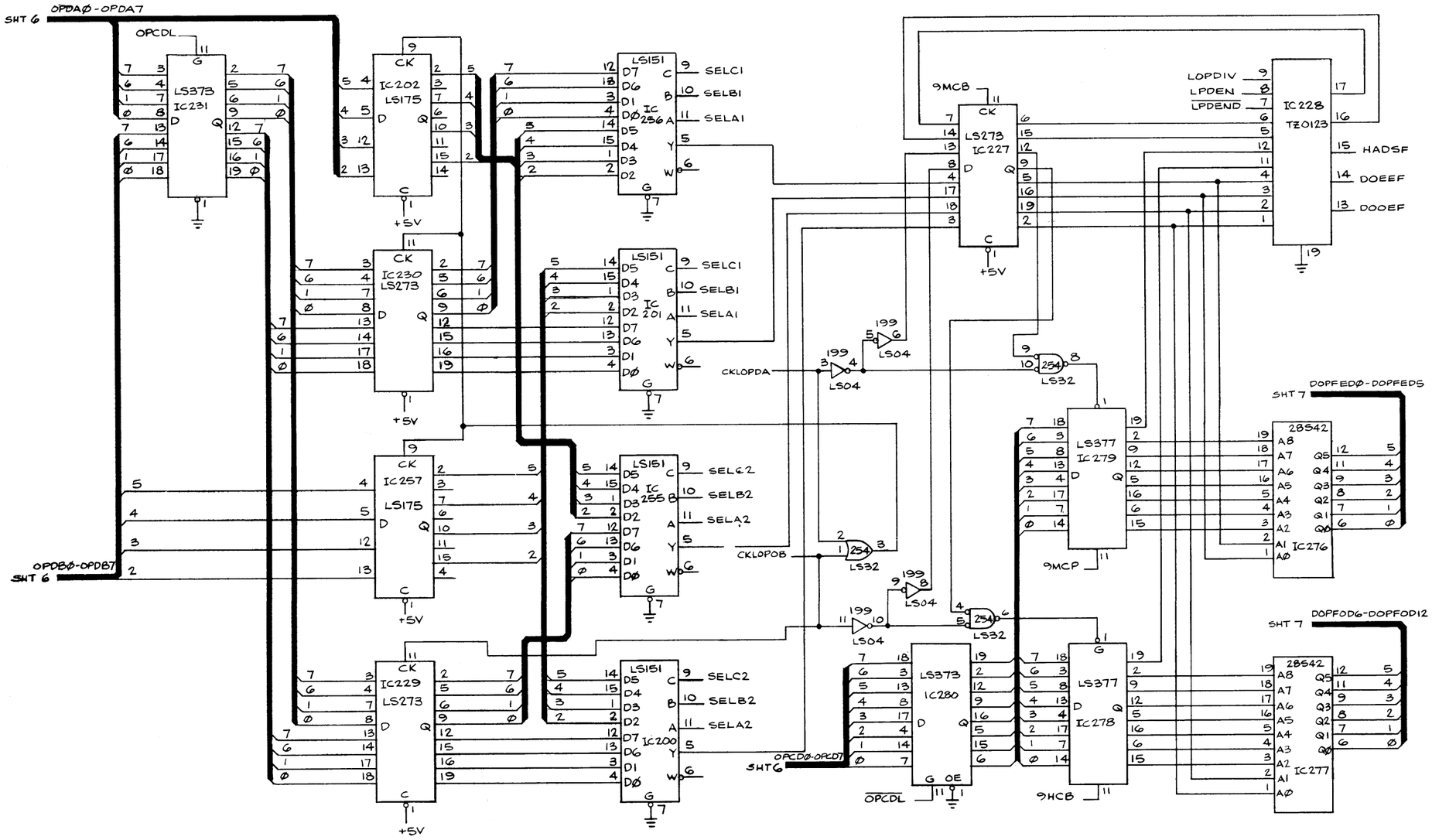

TX-1 Graphics PCB
(TC012)

ATARI®
A Warner Communications Company

© ATARI INC. 1984

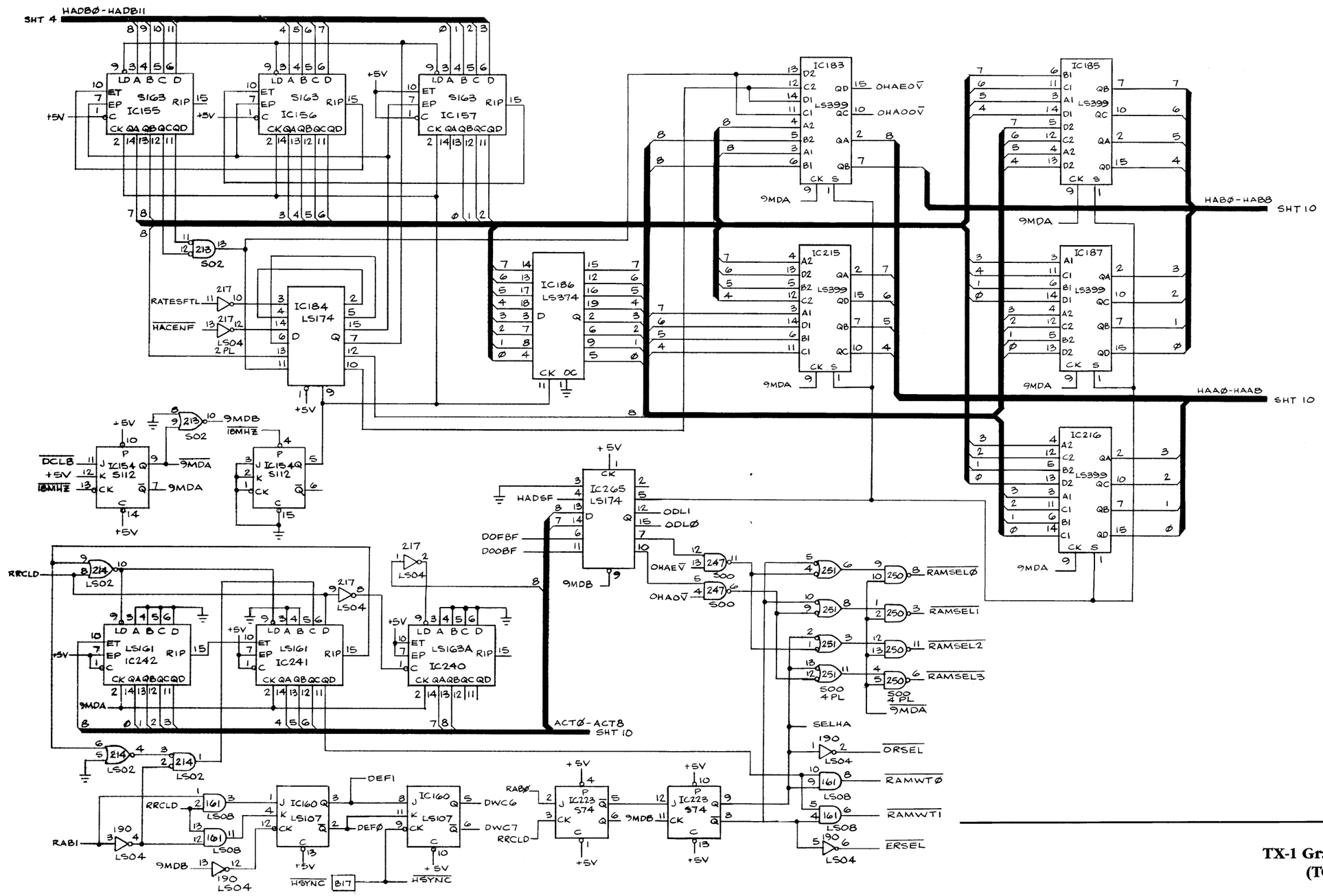

TX-1 Graphics PCB
(TC012)

ATARI®
A Warner Communications Company

© ATARI INC. 1984

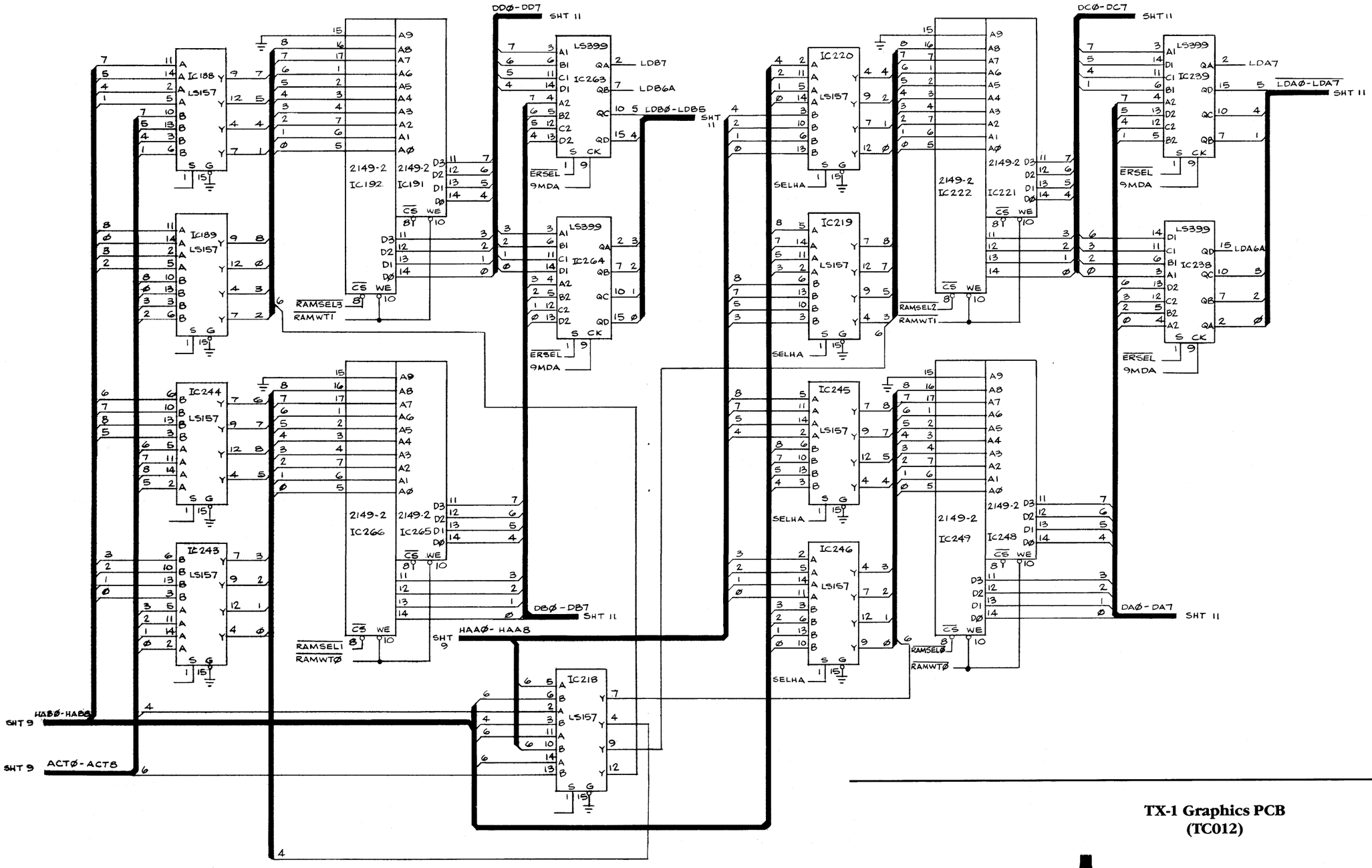

TX-1 Graphics PCB
(TC012)

ATARI®
A Warner Communications Company

© ATARI INC. 1984

SP-262 Sheet 10 of Graphics
1st printing

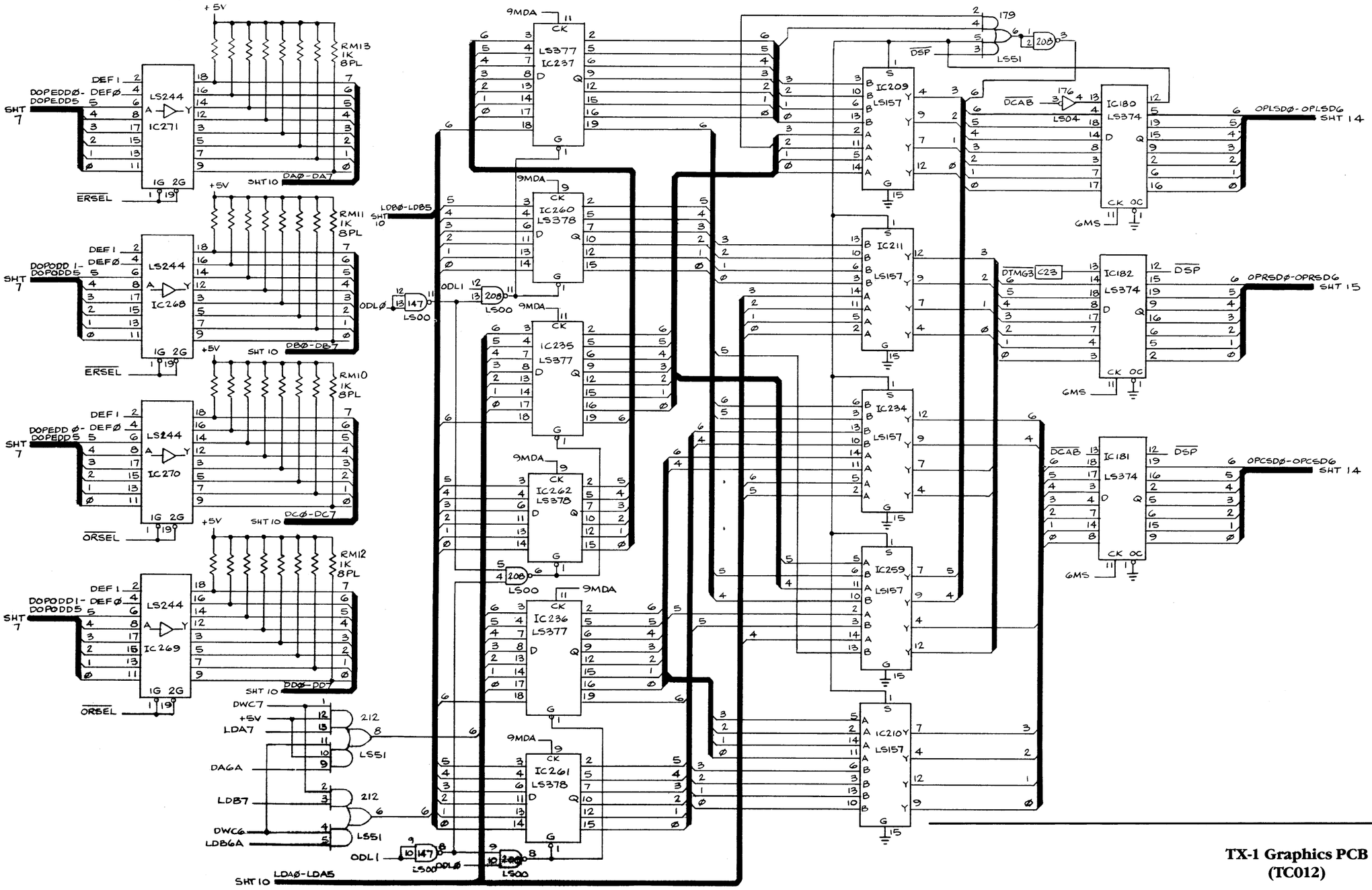

TX-1 Graphics PCB
(TC012)

ATARI
A Warner Communications Company

© ATARI INC. 1984

SP-262 Sheet 11 of Graphics
1st printing

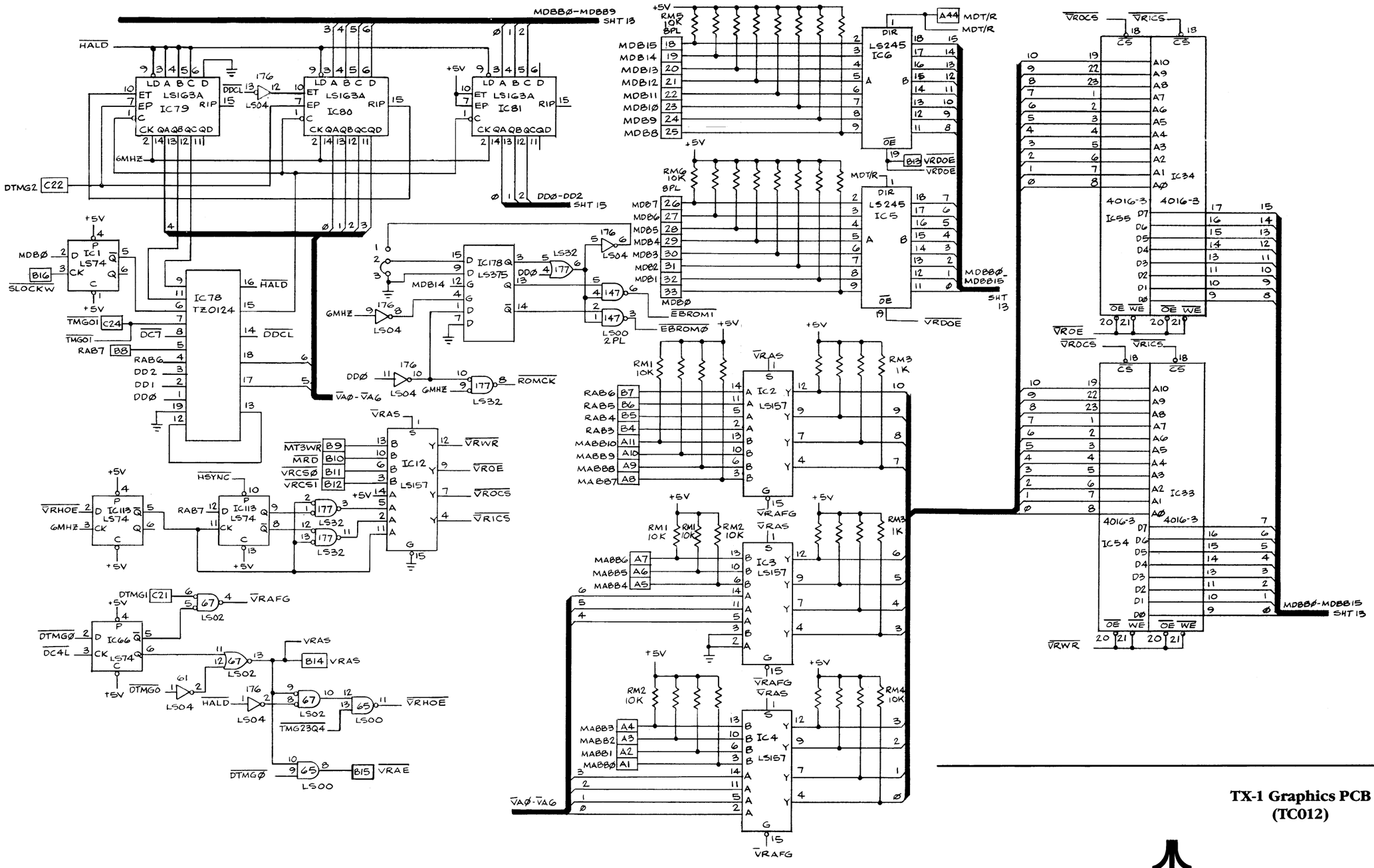

TX-1 Graphics PCB
(TC012)

ATARI®
A Warner Communications Company

© ATARI INC. 1984

SP-262 Sheet 12 of Graphics
1st printing

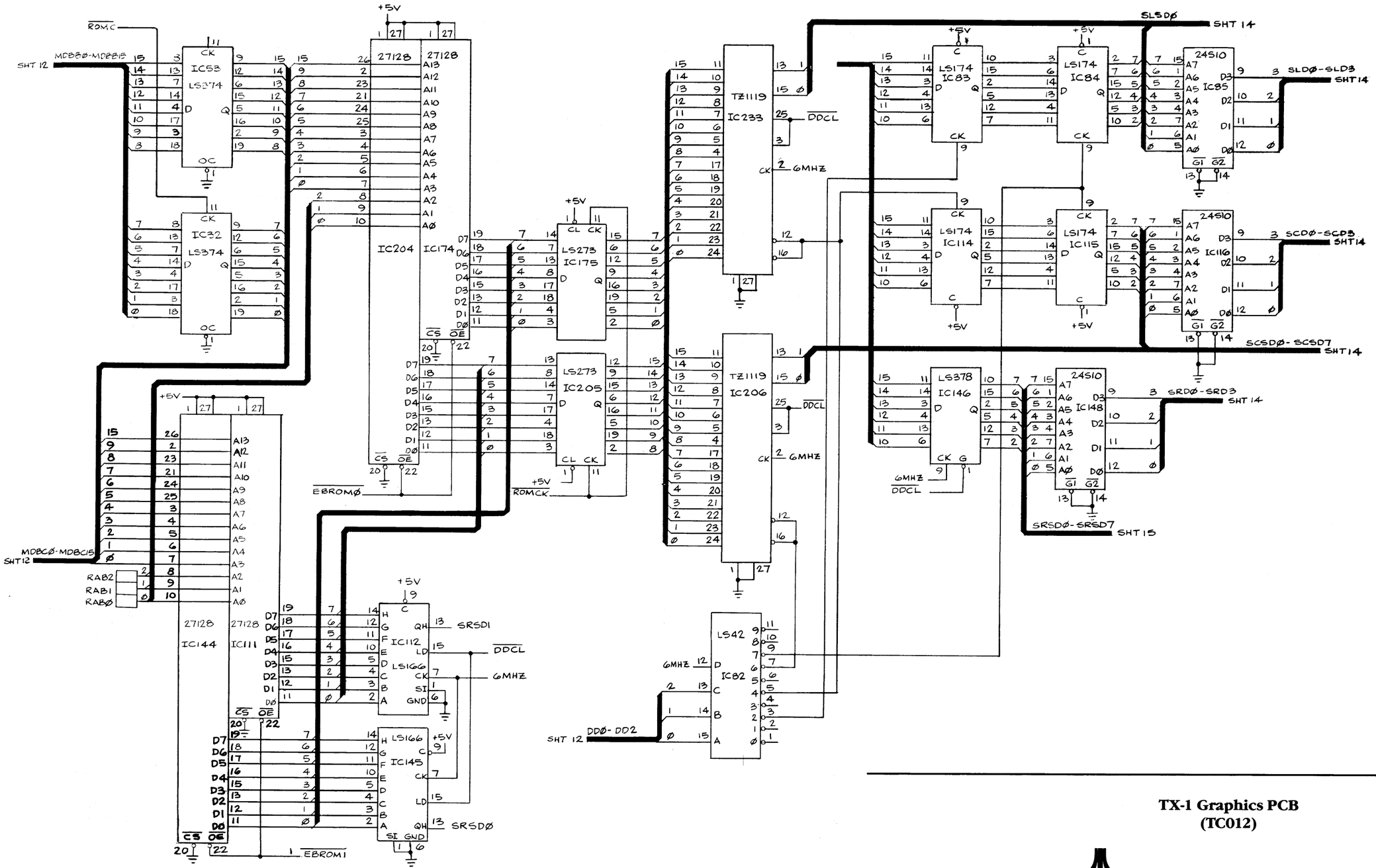

TX-1 Graphics PCB
(TC012)

ATARI®
A Warner Communications Company

© ATARI INC. 1984

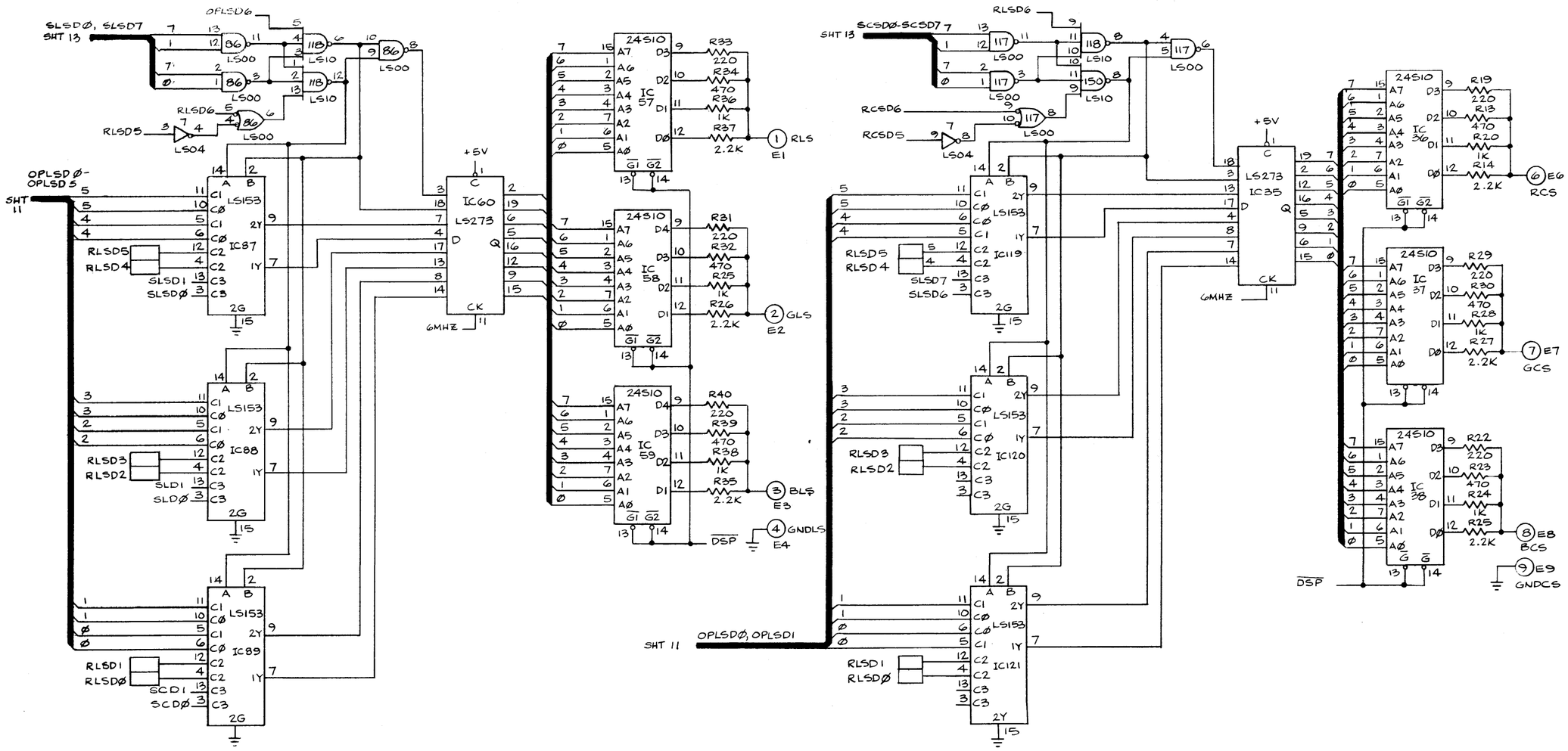

TX-1 Graphics PCB
(TC012)

ATARI®
A Warner Communications Company

© ATARI INC. 1984

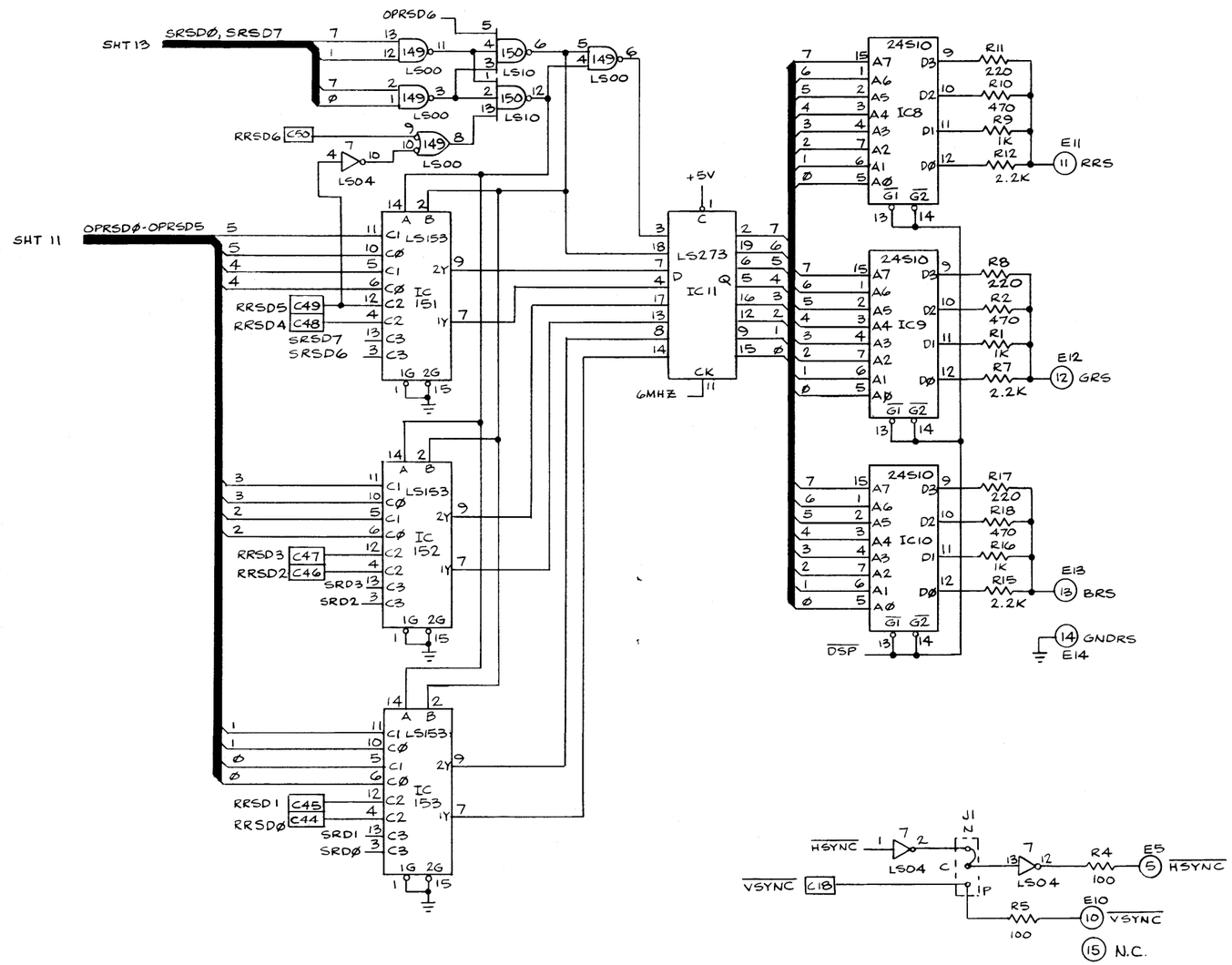

TX-1 Graphics PCB
(TC012)

ATARI®
A Warner Communications Company

© ATARI INC. 1984

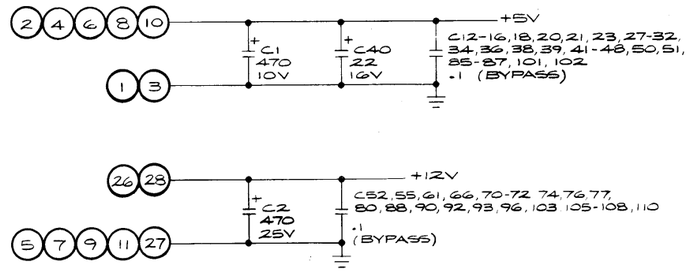

TX-1 Sound PCB
(TC013)

ATARI®
A Warner Communications Company

© ATARI INC. 1984

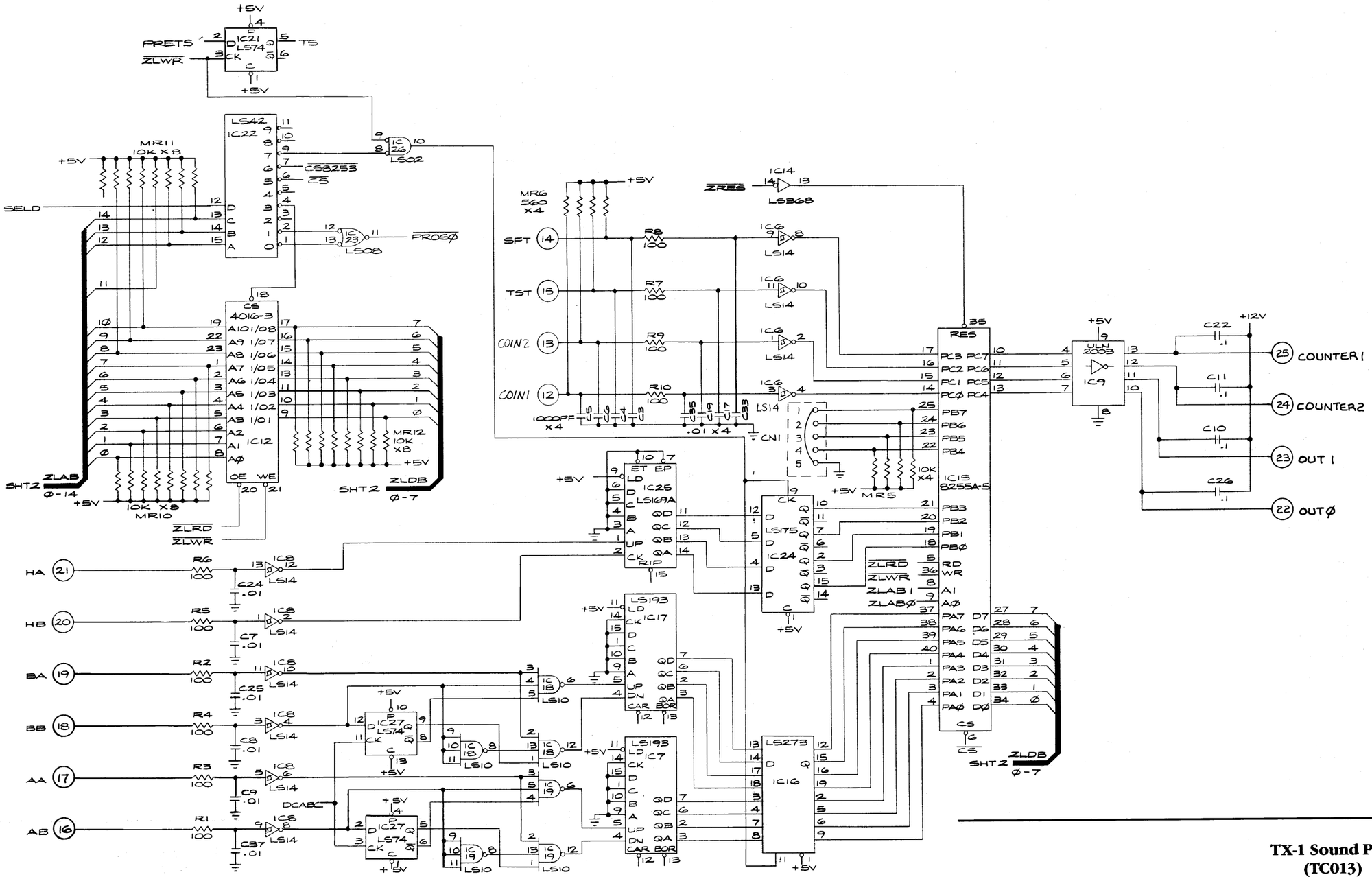

TX-1 Sound PCB
(TC013)

ATARI®
A Warner Communications Company

© ATARI INC. 1984

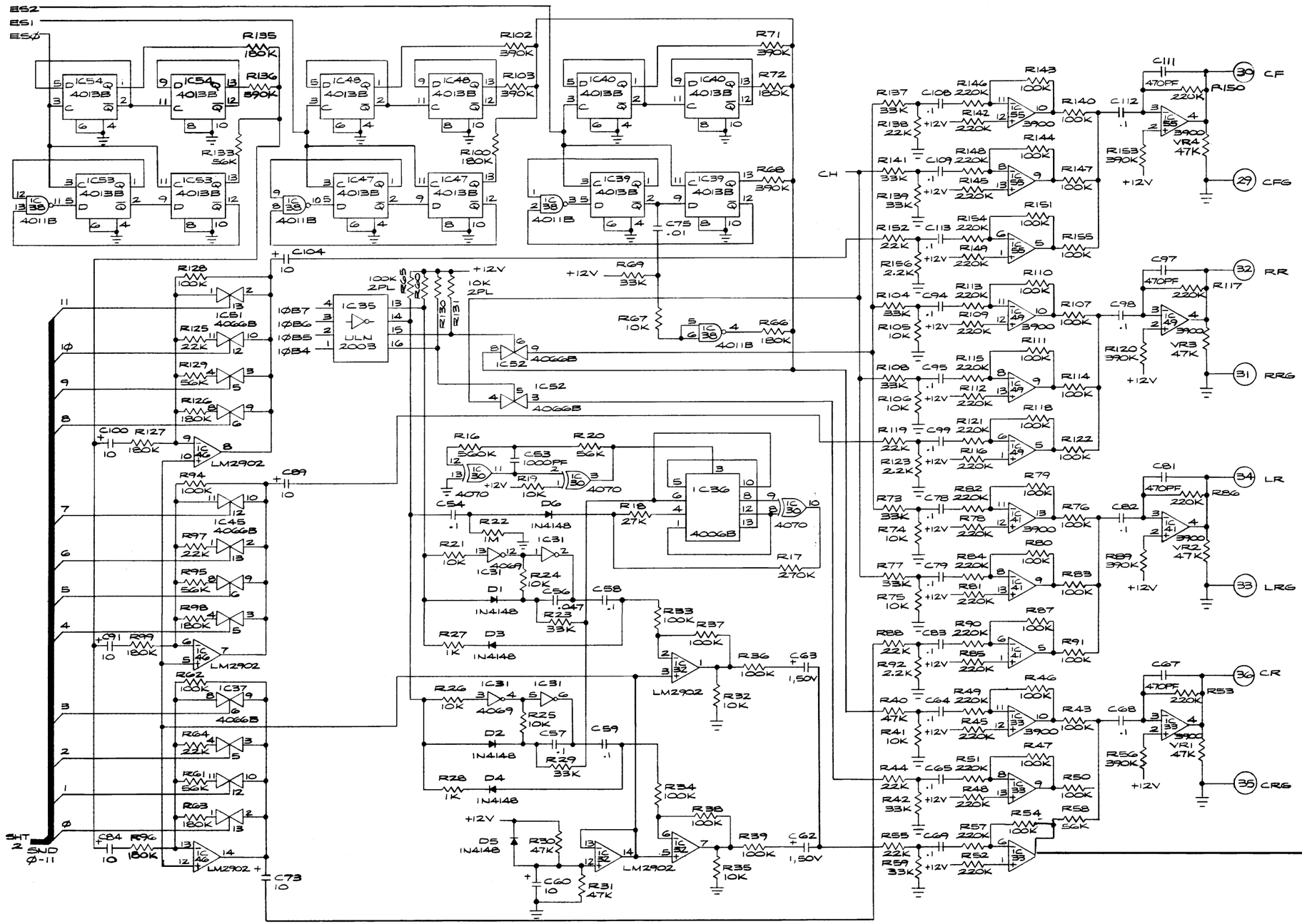

TX-1 Sound PCB
(TC013)

ATARI
A Warner Communications Company

© ATARI INC. 1984

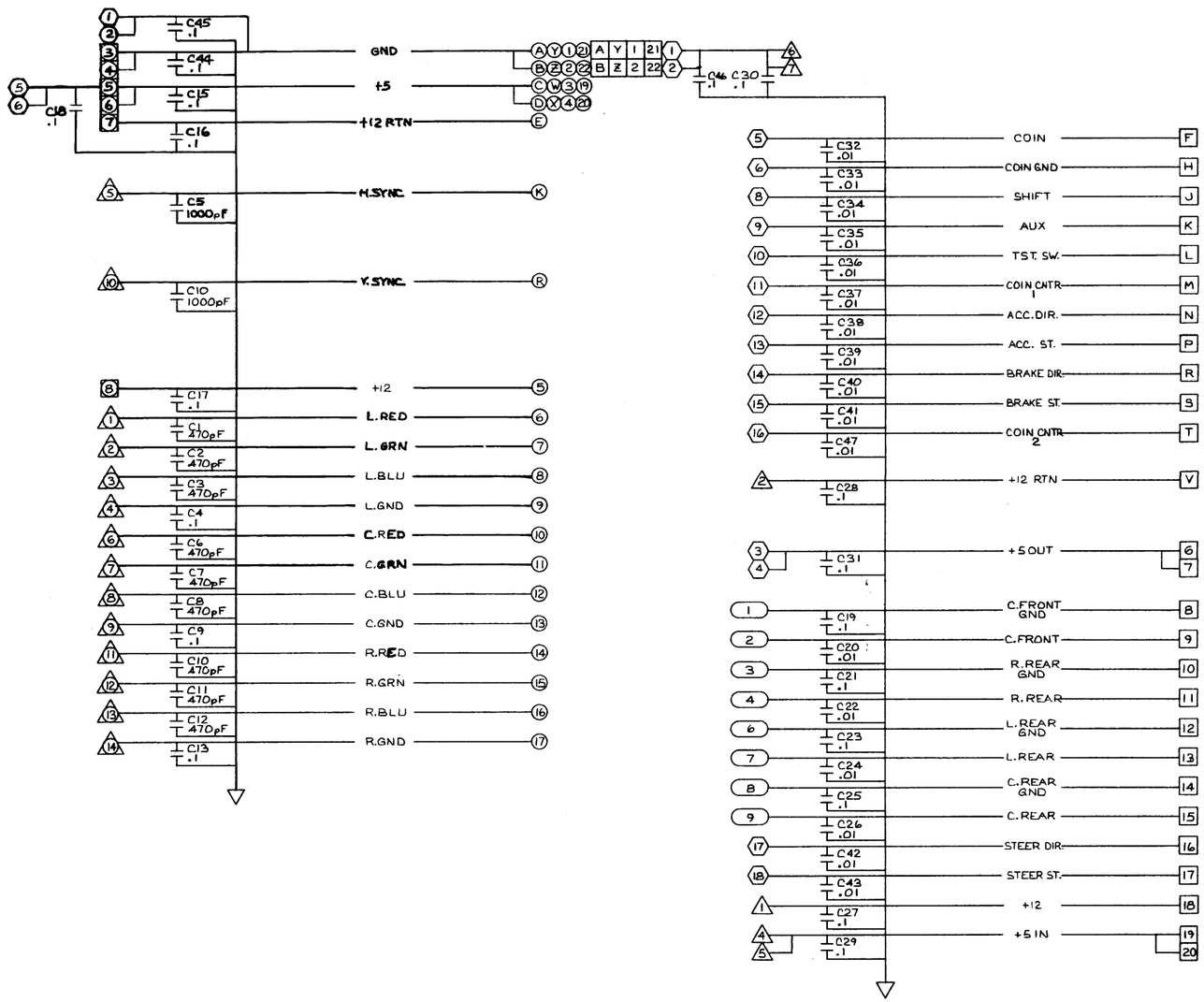

NOTES:

1. KEY:

SYMBOL	DESIG.	DESTINATION
⬡	P10	MAIN CONTROL PCB
△	P11	SUB CONTROL PCB
⬤	P12	SUB CONTROL PCB
△	P13	SOUND I/O PCB
⬡	P14	SOUND I/O PCB
▭	P15	AUDIO PCB
○	P16	AS LABELED
□	P20	AS LABELED

2. N.C:

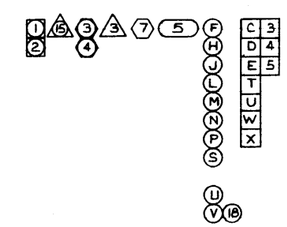

TX-1 EMI Shield PCB Wiring Diagram

ATARI®
A Warner Communications Company

© ATARI INC. 1984

SP-262 Sheet 1 of EMI
1st printing