1943

THE BATTLE OF MIDWAY

© CAPCOM ™

INSTRUCTION MANUAL

CAPCOM
CAPCOM U.S.A., INC.

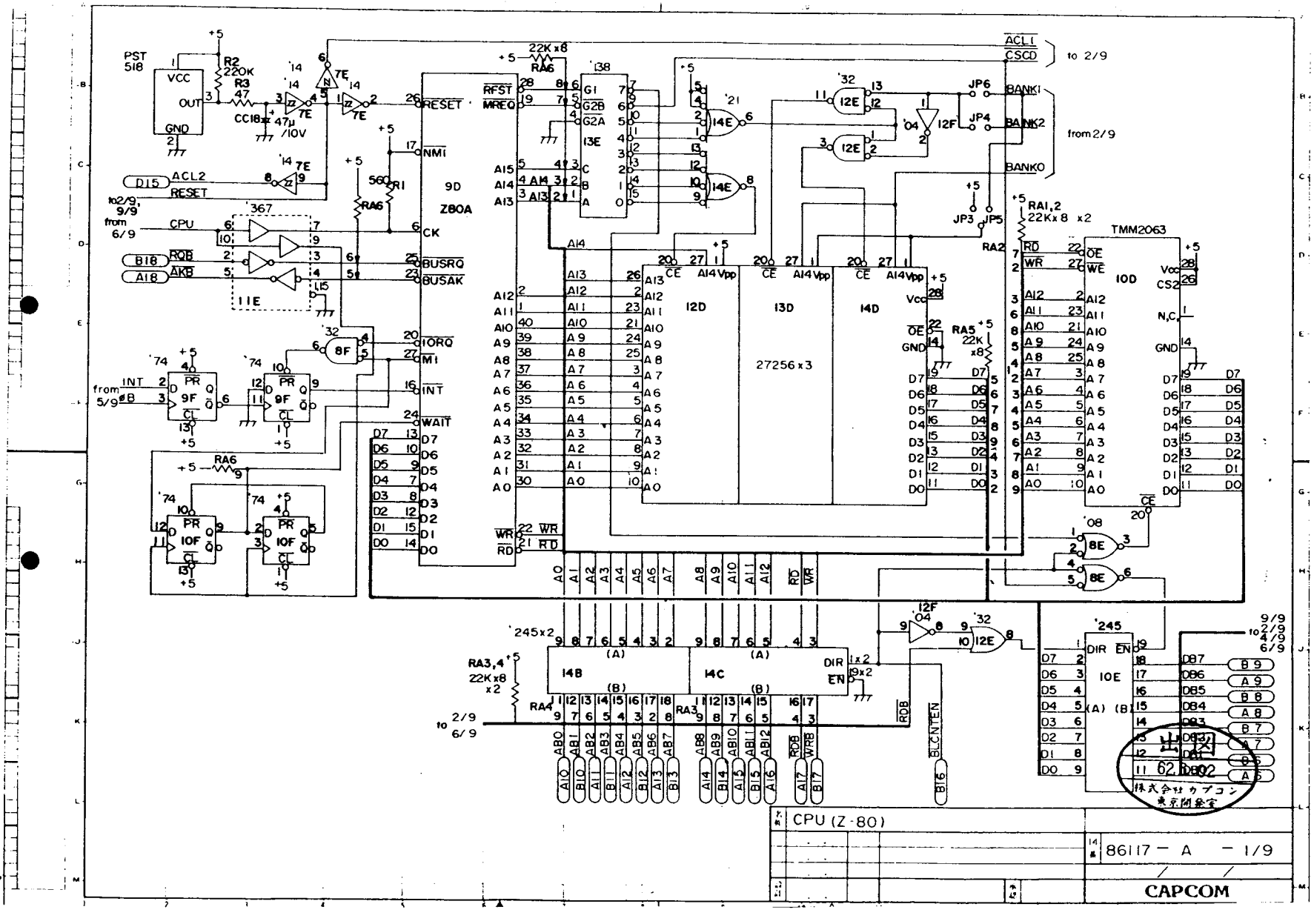
PST 518
VCC
OUT
GND
R2 220K
R3 47
CC18 47μ /10V
D15
ACL2
RESET
to 2/9, 9/9
from 6/9
CPU
B18
A18
RDB
AKB
367
11E
RA6
560
R1
9D
Z80A
RESET
NMI
CK
BUSRQ
BUSAK
IORQ
M1
INT
WAIT
RFST
MREQ
WR
RD
22K x8
RA6
138
13E
G1
G2B
G2A
14E
12E
12F
JP6
JP4
JP3
JP5
BANK1
BANK2
BANK0
ACL1
CSCD
to 2/9
from 2/9
RA1,2 22Kx8 x2
RA2
TMM2063
10D
CS2
N.C.
12D
13D
14D
27256x3
RA5 22K x8
8F
9F
10F
INT
from 5/9
RA6
245x2
14B
14C
RA3,4 22K x8 x2
RA4
RA3
to 2/9 6/9
ABO
AB1
AB2
AB3
AB4
AB5
AB6
AB7
AB8
AB9
AB10
AB11
AB12
AB13
AB14
AB15
AB16
AB17
BLCNTEN
B16
245
10E
DIR
EN
9/9 to 2/9 4/9 6/9
CPU (Z-80)
86117 - A - 1/9
CAPCOM
株式会社カプコン
東京開発室

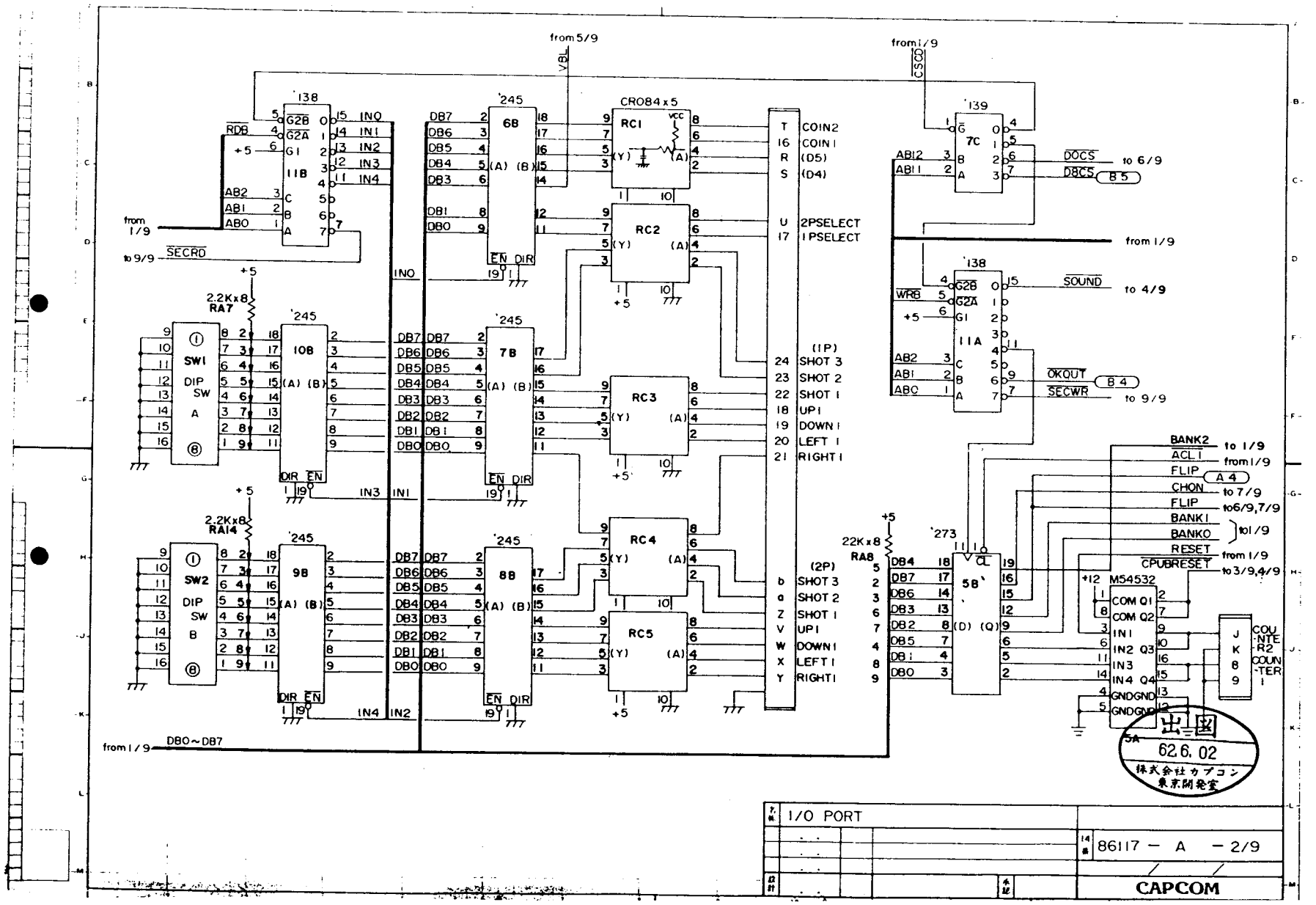
from 5/9
VBL
from 1/9
CSCS
'138
11B
RDB
+5
AB2
AB1
AB0
from 1/9
to 9/9
SECRD
IN0
IN1
IN2
IN3
IN4
'245
6B
7B
8B
9B
10B
DB7
DB6
DB5
DB4
DB3
DB2
DB1
DB0
EN
DIR
2.2Kx8
RA7
RA14
SW1
SW2
DIP SW A
DIP SW B
CR084x5
RC1
RC2
RC3
RC4
RC5
VCC
COIN2
COIN1
(D5)
(D4)
2PSELECT
1PSELECT
(1P)
SHOT 3
SHOT 2
SHOT 1
UP1
DOWN1
LEFT 1
RIGHT1
(2P)
SHOT 3
SHOT 2
SHOT 1
UP1
DOWN1
LEFT 1
RIGHT1
'139
7C
AB12
AB11
DOCS
DBCS
B5
to 6/9
from 1/9
'138
11A
WRB
SOUND
to 4/9
OKOUT
B4
SECWR
to 9/9
22Kx8
RA8
'273
5B
CL
M54532
COM Q1
COM Q2
IN1
IN2 Q3
IN3
IN4 Q4
GNDGND
+12
BANK2
to 1/9
ACL1
from 1/9
FLIP
A4
CHON
to 7/9
FLIP
to6/9,7/9
BANK1
BANK0
to1/9
RESET
from 1/9
CPUBRESET
to3/9,4/9
J K 8 9
COUNTER 1
from 1/9
DB0~DB7
出図
62.6.02
株式会社カプコン
東京開発室
I/O PORT
86117 — A — 2/9
CAPCOM

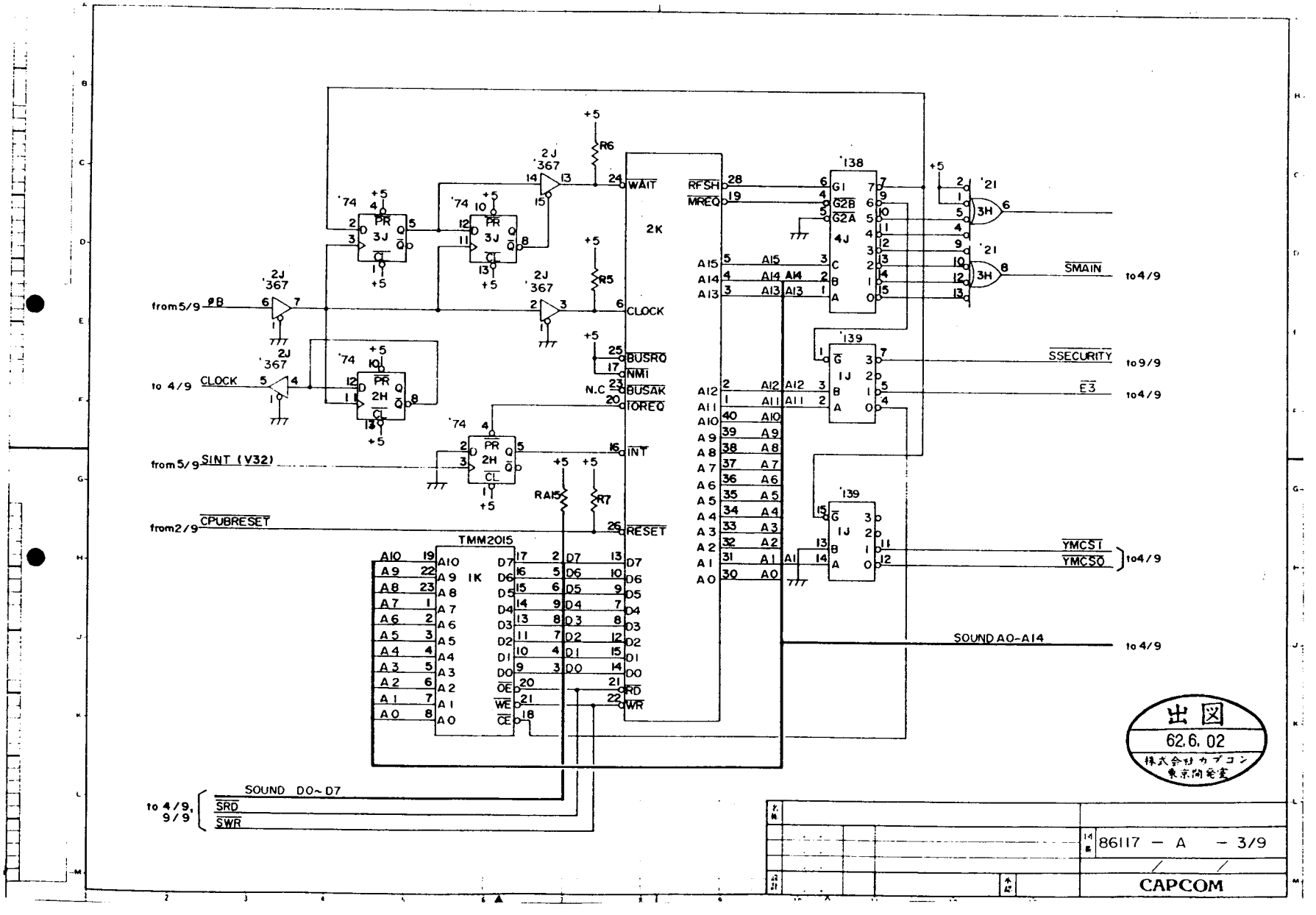
from5/9 φB
to 4/9 CLOCK
from5/9 SINT (V32)
from2/9 CPUBRESET
to 4/9, 9/9 SOUND D0~D7
SRD
SWR
TMM2015
1K
2K
WAIT
CLOCK
BUSRQ
NMI
N.C
BUSAK
IOREQ
INT
RESET
RFSH
MREQ
SMAIN
to4/9
SSECURITY
to9/9
E3
to4/9
YMCS1
YMCS0
to4/9
SOUND A0-A14
to 4/9
出図
62.6.02
株式会社カプコン
東京開発室
86117 - A - 3/9
CAPCOM

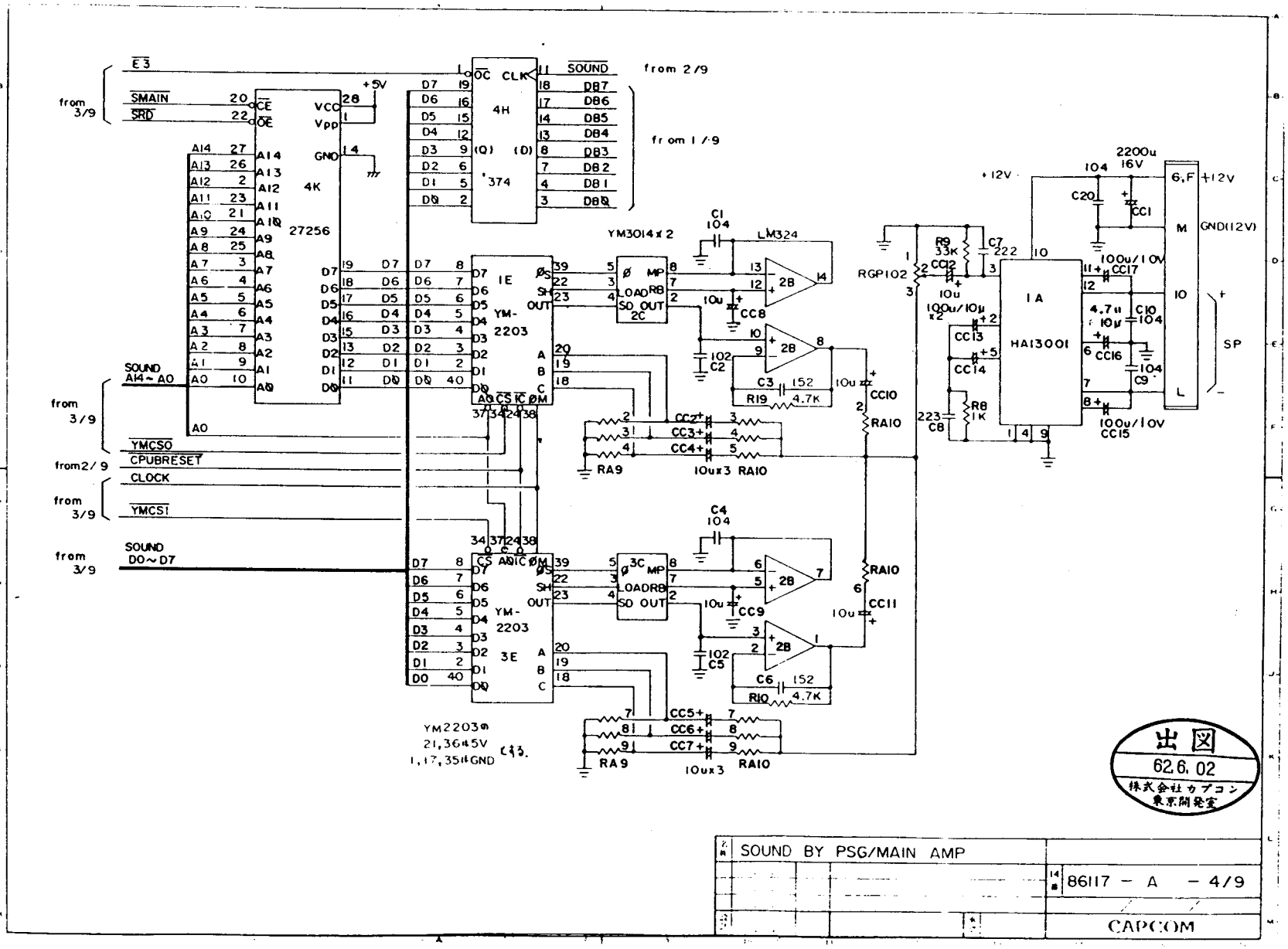
E3
from 3/9
SMAIN
SRD
SOUND A14~A0
YMCS0
from2/9
CPUBRESET
CLOCK
YMCS1
SOUND D0~D7
27256
4K
+5V
4H
'374
SOUND
from 2/9
from 1/9
YM3014×2
LM324
YM-2203
1E
3E
HA13001
1A
+12V
2200u 16V
GND(12V)
SP
YM2203の 21,36は5V 1,17,35はGND
出図
62.6.02
株式会社カプコン 東京開発室
SOUND BY PSG/MAIN AMP
86117 - A - 4/9
CAPCOM

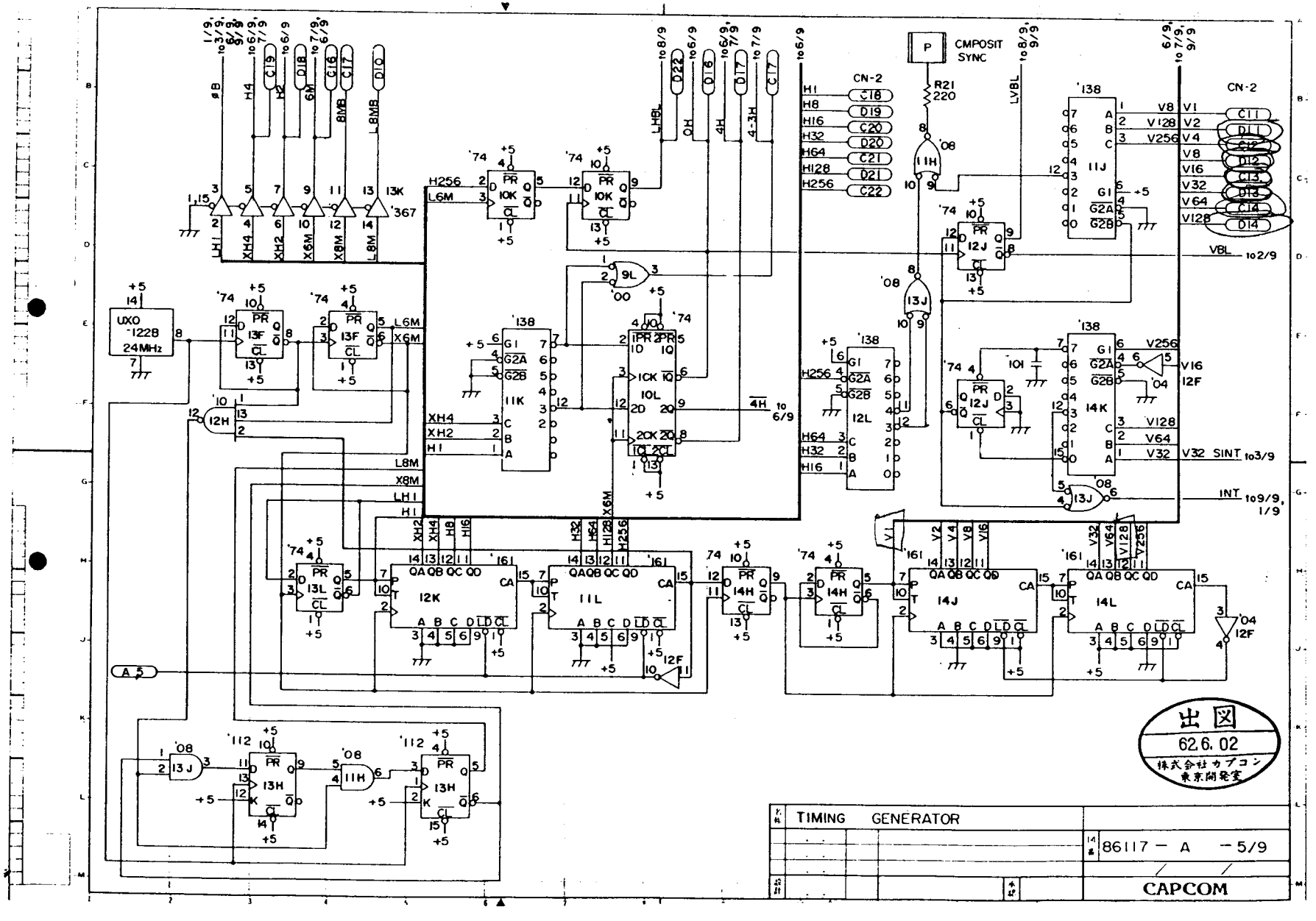
CMPOSIT SYNC
CN-2
UXO 1228 24MHz
TIMING GENERATOR
86117 - A - 5/9
CAPCOM
出図
62.6.02
株式会社カプコン
東京開発室

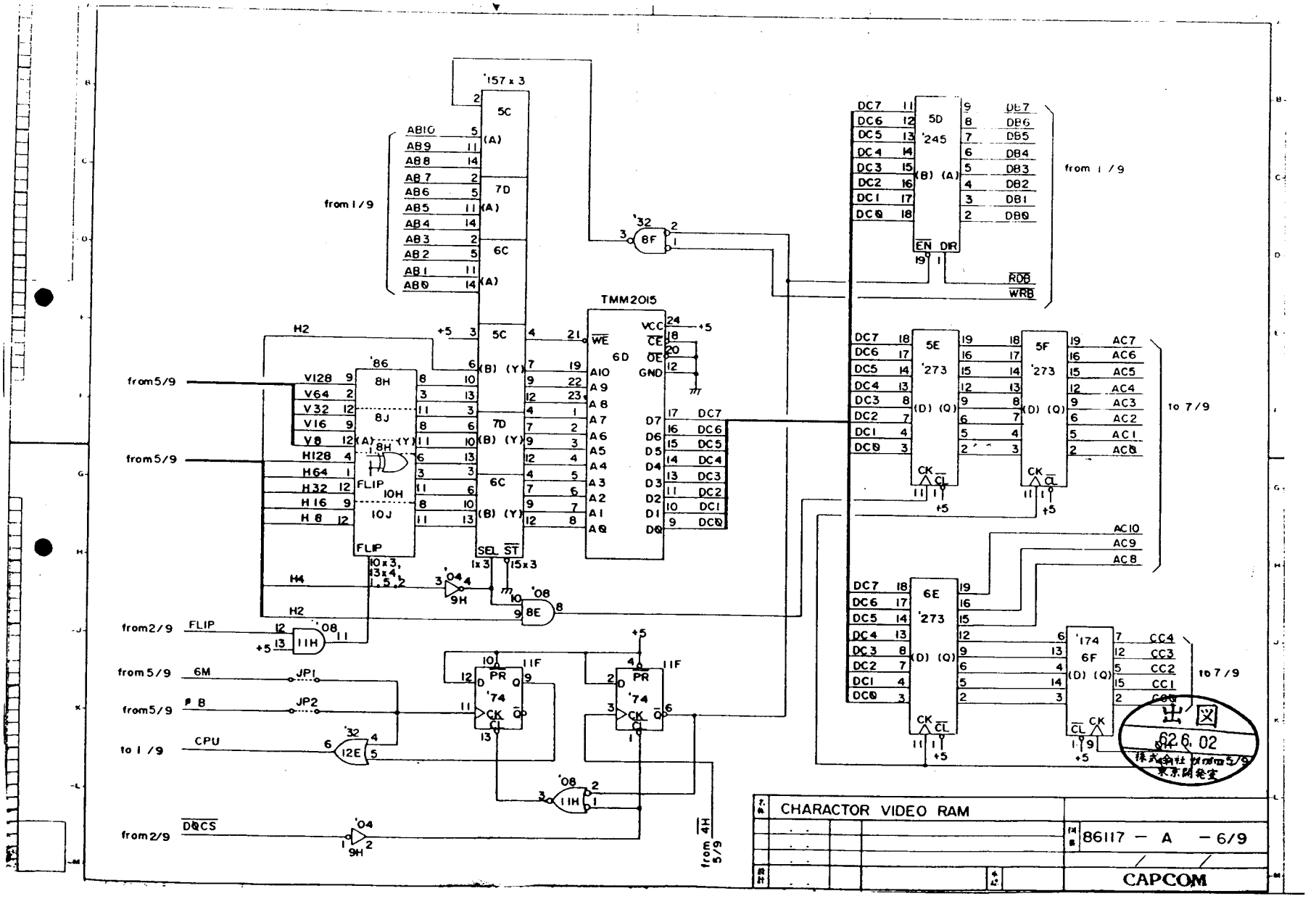
'157 x 3
5C
7D
6C
5C
7D
6C
(A)
(B) (Y)
SEL ST
1x3
15x3
AB10
AB9
AB8
AB7
AB6
AB5
AB4
AB3
AB2
AB1
AB0
from 1/9
TMM2015
6D
WE
CE
OE
GND
VCC
A10
A9
A8
A7
A6
A5
A4
A3
A2
A1
A0
D7
D6
D5
D4
D3
D2
D1
D0
DC7
DC6
DC5
DC4
DC3
DC2
DC1
DC0
'32
8F
'86
8H
8J
10H
10J
FLIP
V128
V64
V32
V16
V8
H128
H64
H32
H16
H8
H2
H4
from5/9
'04
9H
'08
8E
11H
from2/9
FLIP
+5
from5/9
6M
JP1
from5/9
P B
JP2
to 1/9
CPU
12E
'74
PR
CK
CL
11F
DBCS
from 4H 5/9
5D
'245
(B) (A)
EN DIR
DB7
DB6
DB5
DB4
DB3
DB2
DB1
DB0
RDB
WRB
from 1/9
5E
'273
5F
'273
(D) (Q)
AC7
AC6
AC5
AC4
AC3
AC2
AC1
AC0
to 7/9
AC10
AC9
AC8
6E
'273
6F
'174
CC4
CC3
CC2
CC1
CC0
to 7/9
CHARACTOR VIDEO RAM
86117 — A — 6/9
CAPCOM
出図
62.6.02
株式会社 カプコン
東京開発室

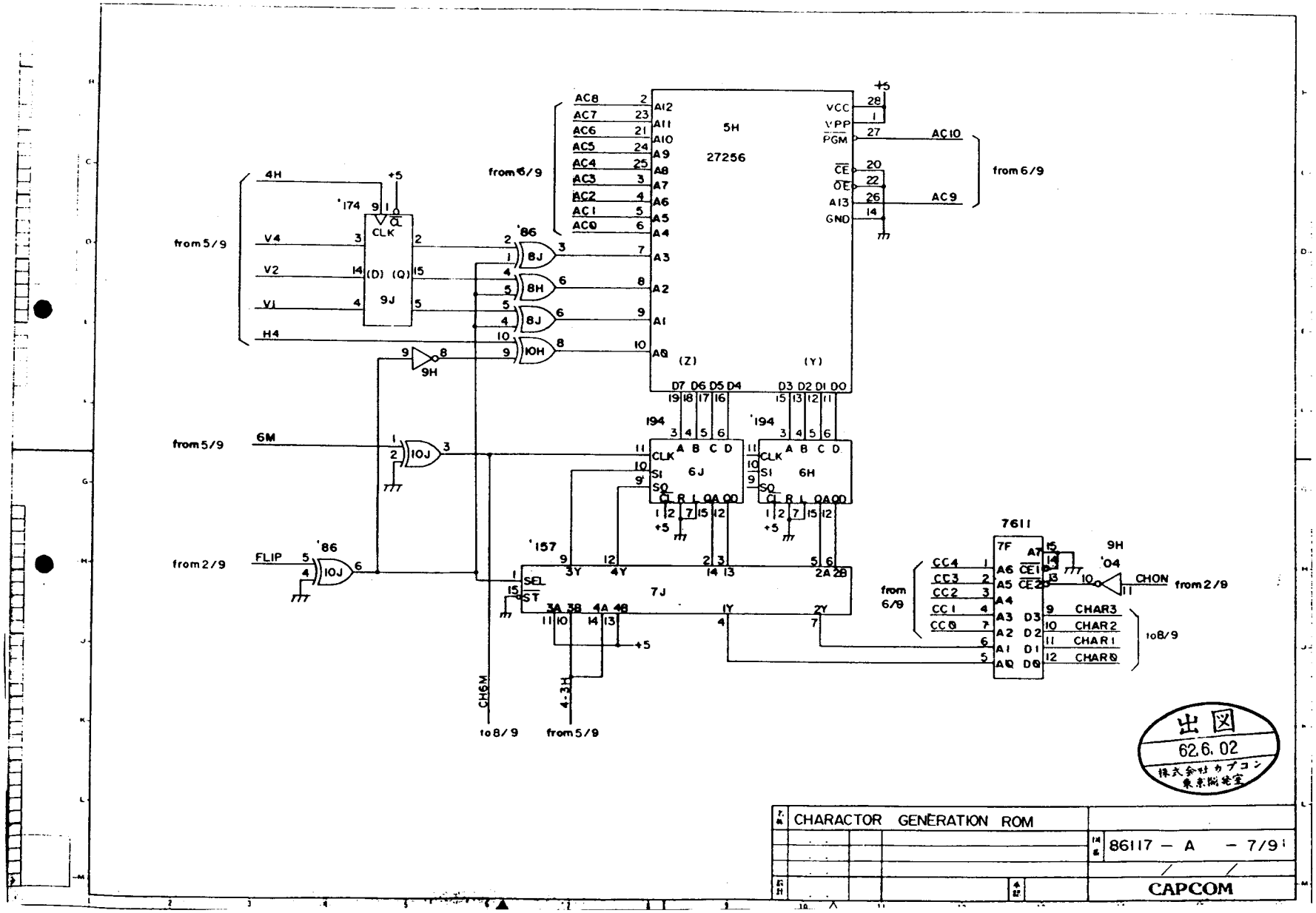
CHARACTOR GENERATION ROM
86117 - A - 7/9
CAPCOM
5H
27256
VCC
VPP
PGM
CE
OE
A13
GND
AC10
AC9
from 6/9
AC8
AC7
AC6
AC5
AC4
AC3
AC2
AC1
AC0
A12
A11
A10
A9
A8
A7
A6
A5
A4
A3
A2
A1
A0
(Z)
(Y)
D7 D6 D5 D4
D3 D2 D1 D0
'174
CLK
(D) (Q)
9J
4H
V4
V2
V1
H4
from 5/9
'86
8J
8H
8J
10H
9H
6M
10J
FLIP
from 2/9
'194
6J
6H
CLK
S1
S0
A B C D
'157
7J
SEL
ST
3Y
4Y
1Y
2Y
2A 2B
3A 3B 4A 4B
CH6M
to 8/9
4-3H
7611
7F
A7
CE1
CE2
A6
A5
A4
A3
A2
A1
A0
D3
D2
D1
D0
CC4
CC3
CC2
CC1
CC0
CHAR3
CHAR2
CHAR1
CHAR0
'04
CHON
from 2/9
+5
出図
62.6.02
株式会社カプコン
東京開発室

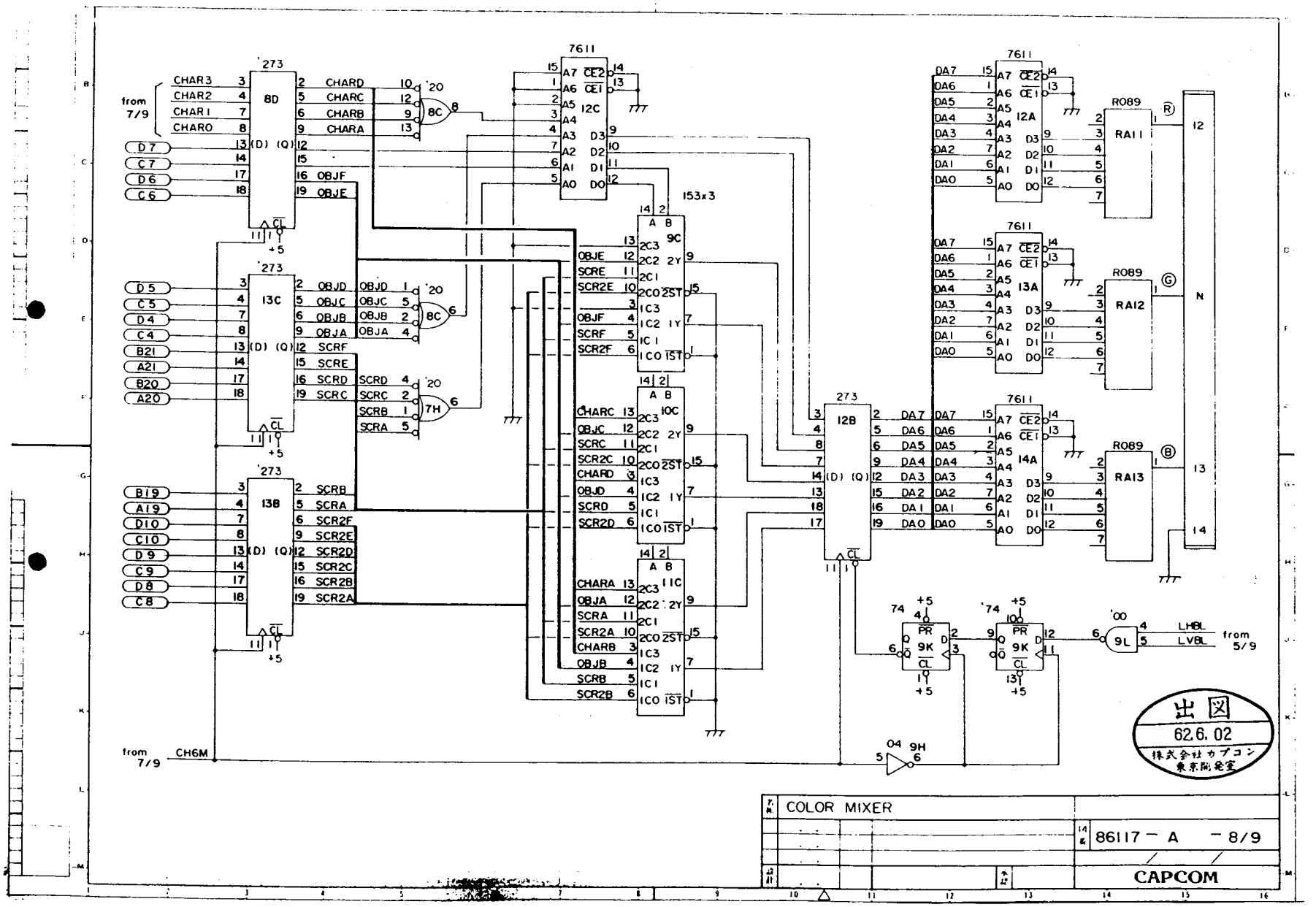
COLOR MIXER
86117 - A - 8/9
CAPCOM
出図
62.6.02
株式会社カプコン
東京開発室
from 7/9
CHAR3
CHAR2
CHAR1
CHAR0
D7
C7
D6
C6
D5
C5
D4
C4
B21
A21
B20
A20
B19
A19
D10
C10
D9
C9
D8
C8
CHARD
CHARC
CHARB
CHARA
OBJF
OBJE
OBJD
OBJC
OBJB
OBJA
SCRF
SCRE
SCRD
SCRC
SCRB
SCRA
SCR2F
SCR2E
SCR2D
SCR2C
SCR2B
SCR2A
CH6M
LHBL
LVBL
from 5/9
R089
RA11
RA12
RA13
153x3
7611
273
'20
'74
'00
+5

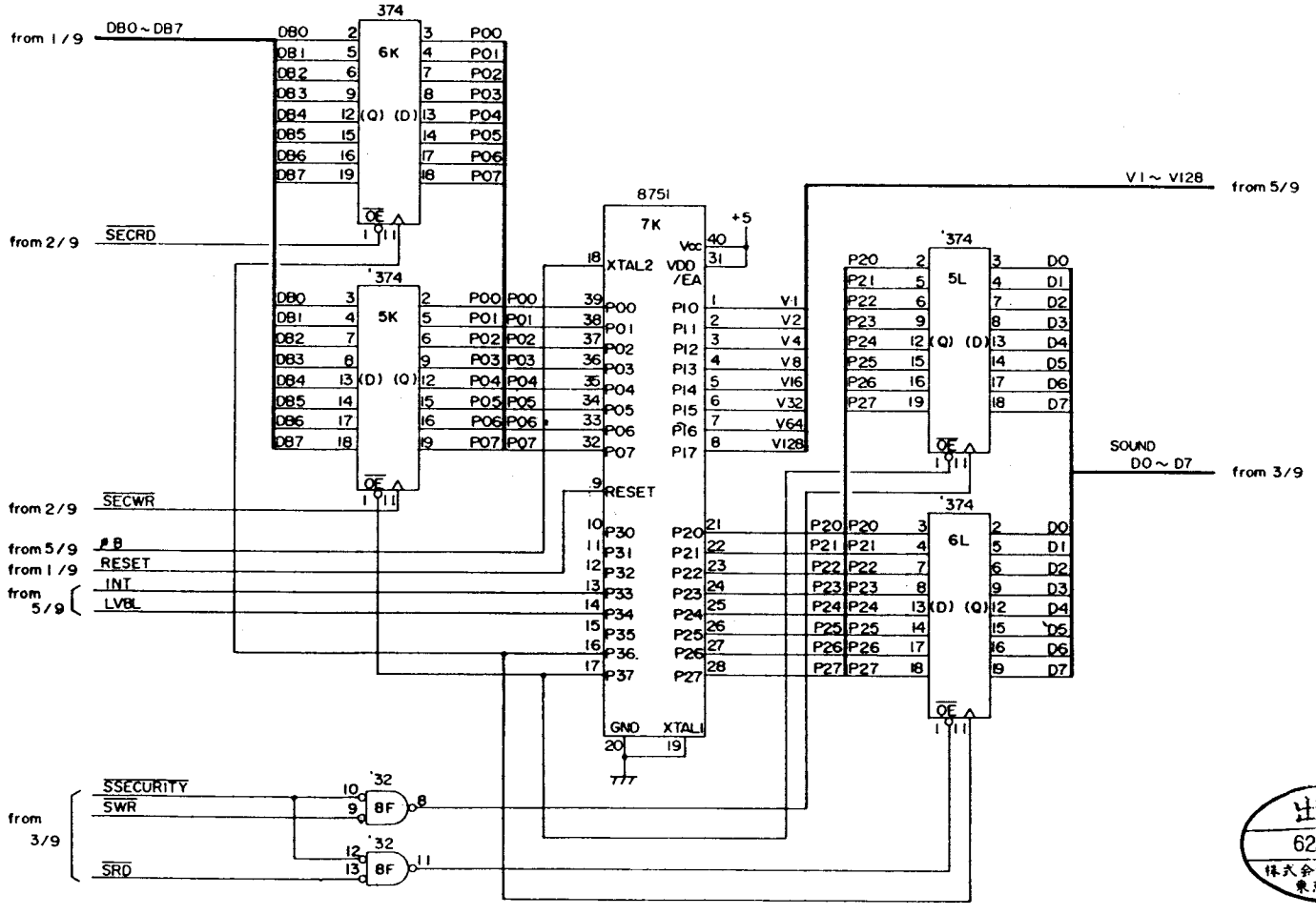

出図
62.6.02
株式会社カプコン
東京開発室

SECURITY		
	86117 − A	− 9/9
		CAPCOM

TABLE OF CONTENTS

PAGE	
1	Game Play
2	Dip Switch Settings
3	Location & Set Up
4	Coin Door Maintenance
5	Control Panel Buttons
6	Coin Control Joystick Assembly
7	WICO Joystick Assembly
8	Main AC Wiring Diagram
9	Service Information On Monitor
21	Schematics (Board A)
30	Schematics (Board B)
45	Jamma Connector
46	Warranty

GAME DESCRIPTION 1943

- 1943 is a 2 players Simutaneous Game.
- 2nd player can buy in at any time.
- Button one : shoot
- Button two : causes lighting and cyclone.
- Button one and two : simutaneously to loop.
- 2 players can loan each other their energy by simply flying on top of one another.
- Shoot "POW" to select power-up weapons.

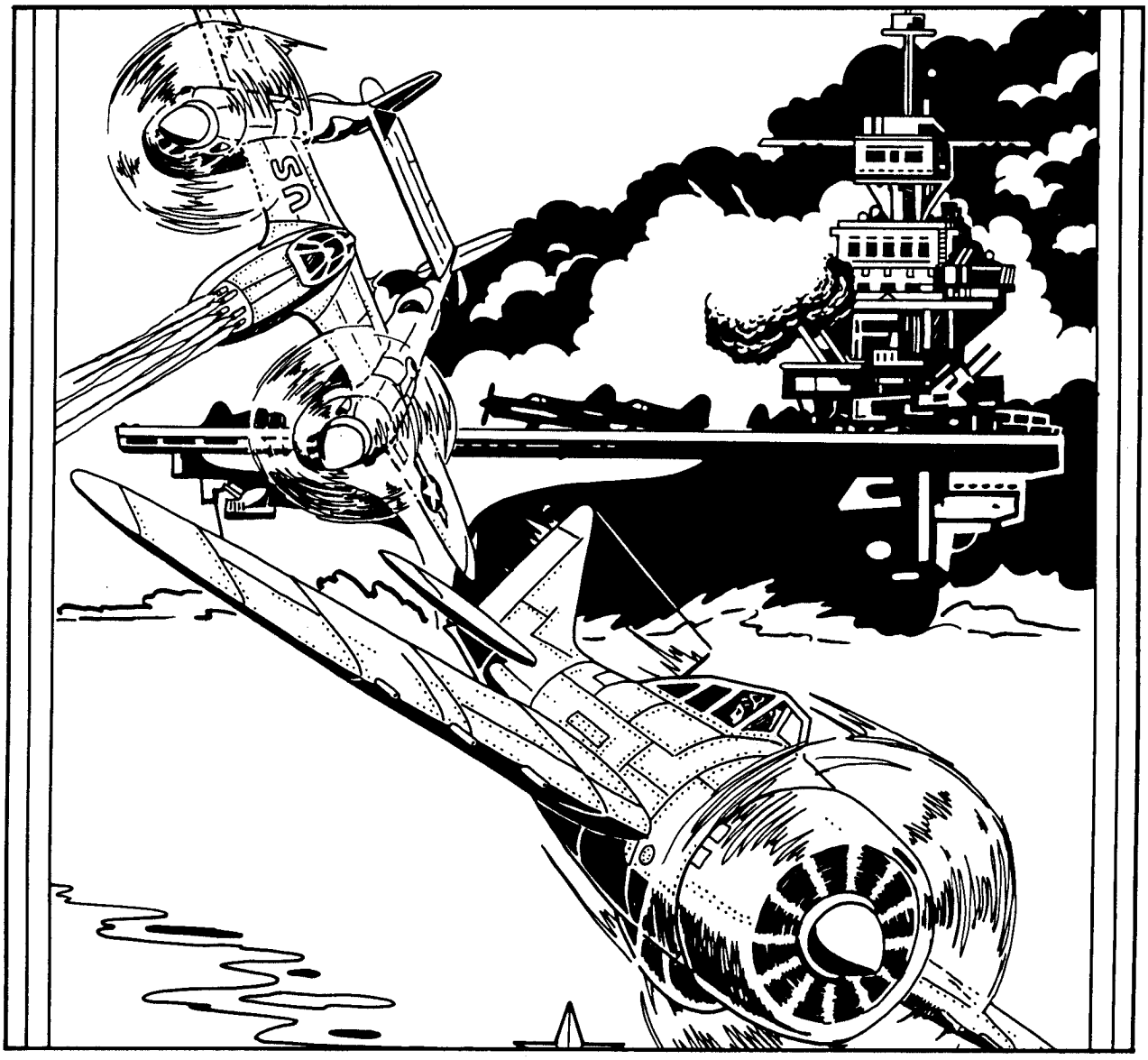

Forty years ago, at the height of World War II, the Japanese main squadron tasted defeat off the coast of the midway Islands. Some say this battle greatly changed the outcome of the war.

DIP SWITCH SETTINGS - 1943

DIP - A

ITEM	DESCRIPTION	1	2	3	4	5	6	7	8
TEST MODE	NORMAL TEST	**OFF** ON							
SCREEN STOP	NORMAL STOP		**OFF** ON						
UPRIGHT/TABLE CHANGE	UPRIGHT TABLE			**OFF** ON					
CREDITS FOR 2 PLAYERS	2 CREDITS/2 PLAYERS 1 CREDIT/2 PLAYERS				**OFF** ON				
DIFFICULTY LEVEL	1 EASY					OFF	OFF	OFF	OFF
	2					OFF	OFF	OFF	ON
	3					OFF	OFF	ON	OFF
	4					OFF	OFF	ON	ON
	5					OFF	ON	OFF	OFF
	6					OFF	ON	OFF	ON
	7					OFF	ON	ON	OFF
	8 NORMAL					**OFF**	**ON**	**ON**	**ON**
	9					ON	OFF	ON	OFF
	10					ON	OFF	OFF	ON
	11					ON	OFF	ON	OFF
	12					ON	OFF	ON	ON
	13					ON	ON	OFF	OFF
	14					ON	ON	OFF	ON
	15					ON	ON	ON	OFF
	16 DIFFICULT					ON	ON	ON	ON

DIP - B

ITEM	DESCRIPTION	1	2	3	4	5	6	7	8
SOUND DURING DEMONSTRATION	WITH SOUND WITHOUT SOUND	**OFF** ON							
CONTINUE	CONTINUE WITHOUT CONTINUE		**OFF** ON						
COIN 2	1 coin 1 credit			**OFF**	**OFF**	**OFF**			
	1 – 2			OFF	OFF	ON			
	1 – 3			OFF	ON	OFF			
	1 – 4			OFF	ON	ON			
	1 – 5			ON	OFF	OFF			
	2 – 1			ON	OFF	ON			
	3 – 1			ON	ON	OFF			
	4 – 1			ON	ON	ON			
COIN 1	1 coin 1 credit						**OFF**	**OFF**	**OFF**
	1 – 2						OFF	OFF	ON
	1 – 3						OFF	ON	OFF
	1 – 4						OFF	ON	ON
	1 – 5						ON	OFF	OFF
	2 – 1						ON	OFF	ON
	3 – 1						ON	ON	OFF
	4 – 1						ON	ON	ON

LOCATION AND SETUP

INSPECTION

1. Remove the game from its shipping crate.
2. Inspect the entire outside of it for any signs of damage.

☐ Any scratches?, dents?, cracks?

☐ Any broken controls?

☐ Just look it over closely and make a note of any signs of damage.

3. Remove the shipping cleats from the bottom of the cabinet.
4. Install the four levelers, one at each corner of the cabinet.

☐ Level the cabinet.

5. Open the cabinet and inspect the inside of the game for any signs of damage.

☐ Also check to make sure all plug-in connectors on the wire harness are firmly seated.

☐ Replug any connectors found unplugged. DO NOT FORCE PLUGS ONTO CONNECTORS. DO NOT FORCE PLUGS TOGETHER. If it won't go on easily, assuming the keys are lined up, it either does not belong there or is damaged.

☐ Make sure all printed circuit boards (P.C.B.'s) are firmly seated in their connectors. These connectors are also keyed. The P.C.B.'s will only go into them one way without being damaged.

☐ Note the location of the game's serial number.

☐ Check all major subassemblies to be sure they are mounted securely.

Power supply.
Control panel(s).
T.V. monitor.
Other P.C.B.'s and/or P.C.B. rack, etc.
Power Chassis.

6. Make a note of any problems that can't be easily corrected.
7. Call your distributor and/or service man about your problem list.

NOTE: ALL connectors or plugs are key so they will only go together when all pins are properly lined up.

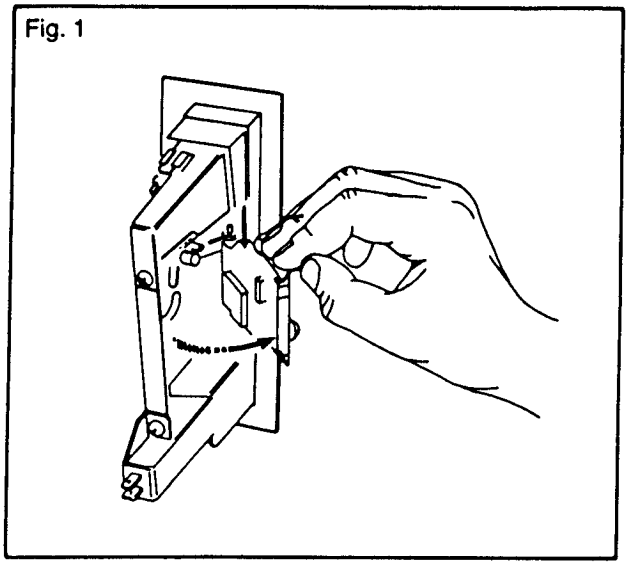

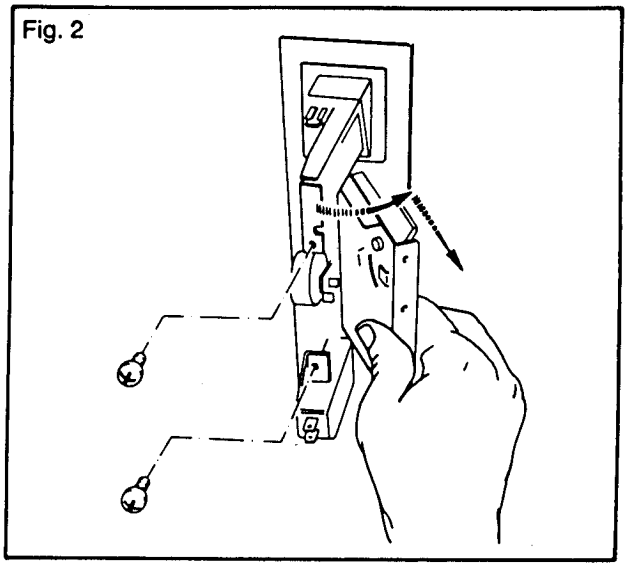

The magnet that is fitted to the mechanism, should be kept clean from foreign particles. The magnet can be cleaned by swinging the gate open. (as shown in Fig. 1). Remove metal filings from the magnet by guiding the point of a screwdriver along the edges of the magnet, such that the filings cling to the screwdriver.

The mechanism can be cleaned by immersing in water using a small brush to clean the mechanism. Rinse the mechanism with boiling water and dry with compressed air.

Note:
Since the Gold Mech relies on coins passing the magnet at a constant speed, the rejector must be free of dirt and grease which may slow down the coins. Do not lubricate the acceptor with oil as this slows down coins.

If the above procedures are not successful, check for worn, bent or damaged parts and replace where necessary.

Removal of Mechanism

To remove the coin selector: Unscrew the two screws (as shown in Fig. 2)—swing rear of selector body away from the lock-out side and withdraw.

The Gold Mech Acceptors are designed to require a minimum of maintenance and field adjustment. Coins are checked by diameter and thickness, weight, metal content, bounce, and for ferromagnetic coins such as nickel and steel, a rim test is also used.

Coin switch

The coin switch comes in two different spring tensions—identified by the color of the plastic boss at the wire's pivot point.

Red: Light tension—U.S. 25¢

White: Heavy tension—heavy foreign coins

*WICO BUTTON

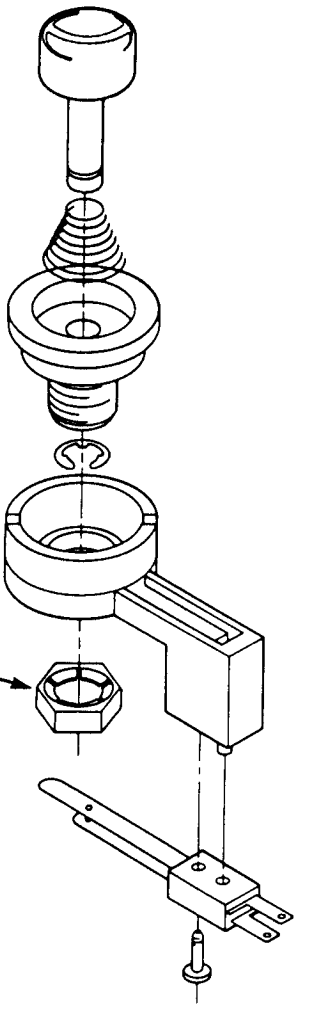

Push Button Holder
with Molded Switch and
Embossed Tabs

Wico P/N 15-9123-01

Locknut

Wico P/N 19-0254-01

*COIN CONTROL BUTTON

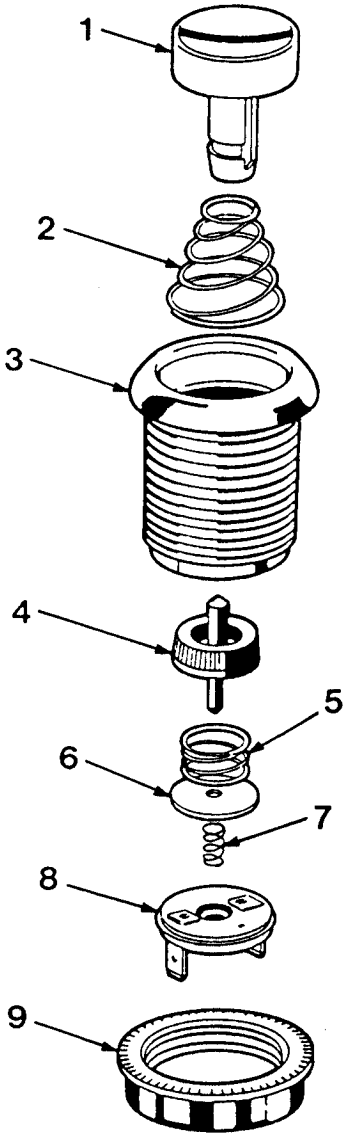

ITEM NO.	DESCRIPTION
1	Button Plunger
2	Button Spring
3	Button Bezel
4	Switch Acluator
5	Washer Spring
6	Contact Washer
7	Washer Spring
8	Contact Plate
9	Fixing Nut

* WHERE APPLICABLE

COIN CONTROL JOYSTICK *

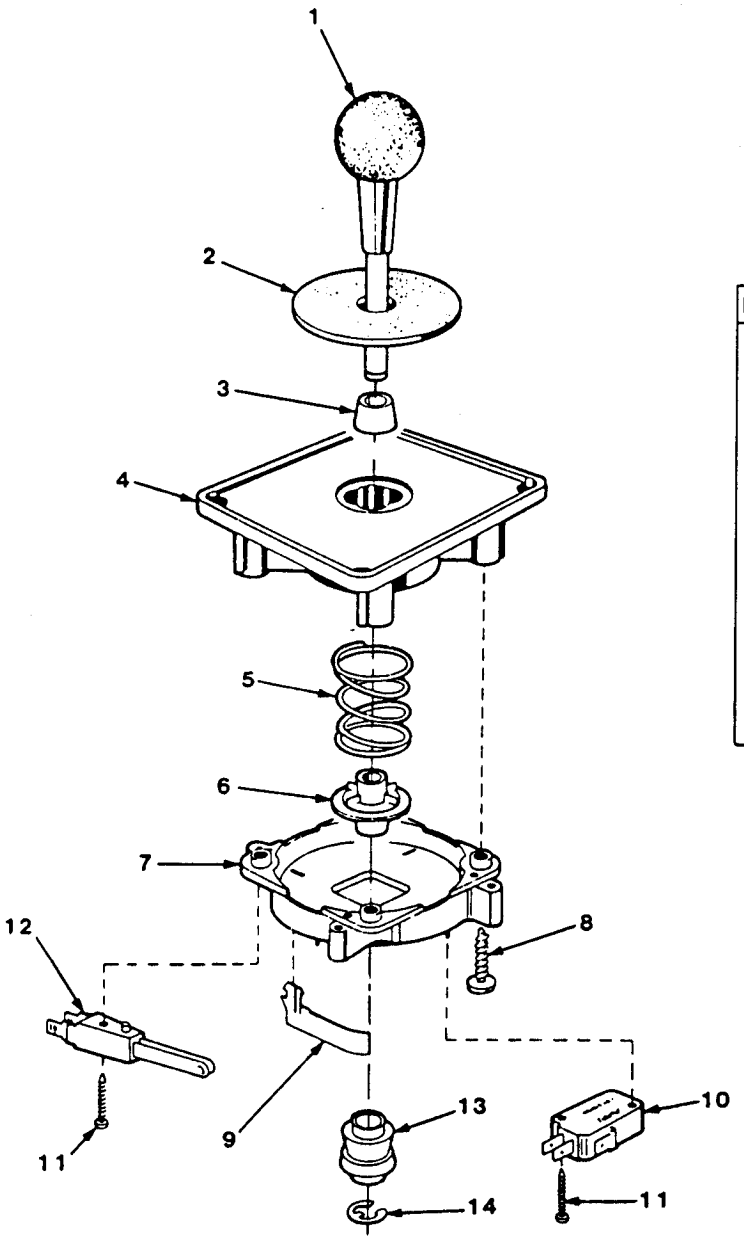

ITEM NO.	DESCRIPTION
1	1.25" Knob & Shaft
2	2" Washer
3	Pivoi Cone
4	S.T. Nylon Hub
5	Return Spring
6	Spring Bushing
7	Switch Mount Bracket
8	Screw #10 x 3/4"
9	Switch Protector
10	Micro Switch
11	Screw #4 x 3/4"
12	Side Mount Switch
13	4/8 Way Actuator
14	E-Ring

*** Where Applicable**

WICO JOYSTICK *

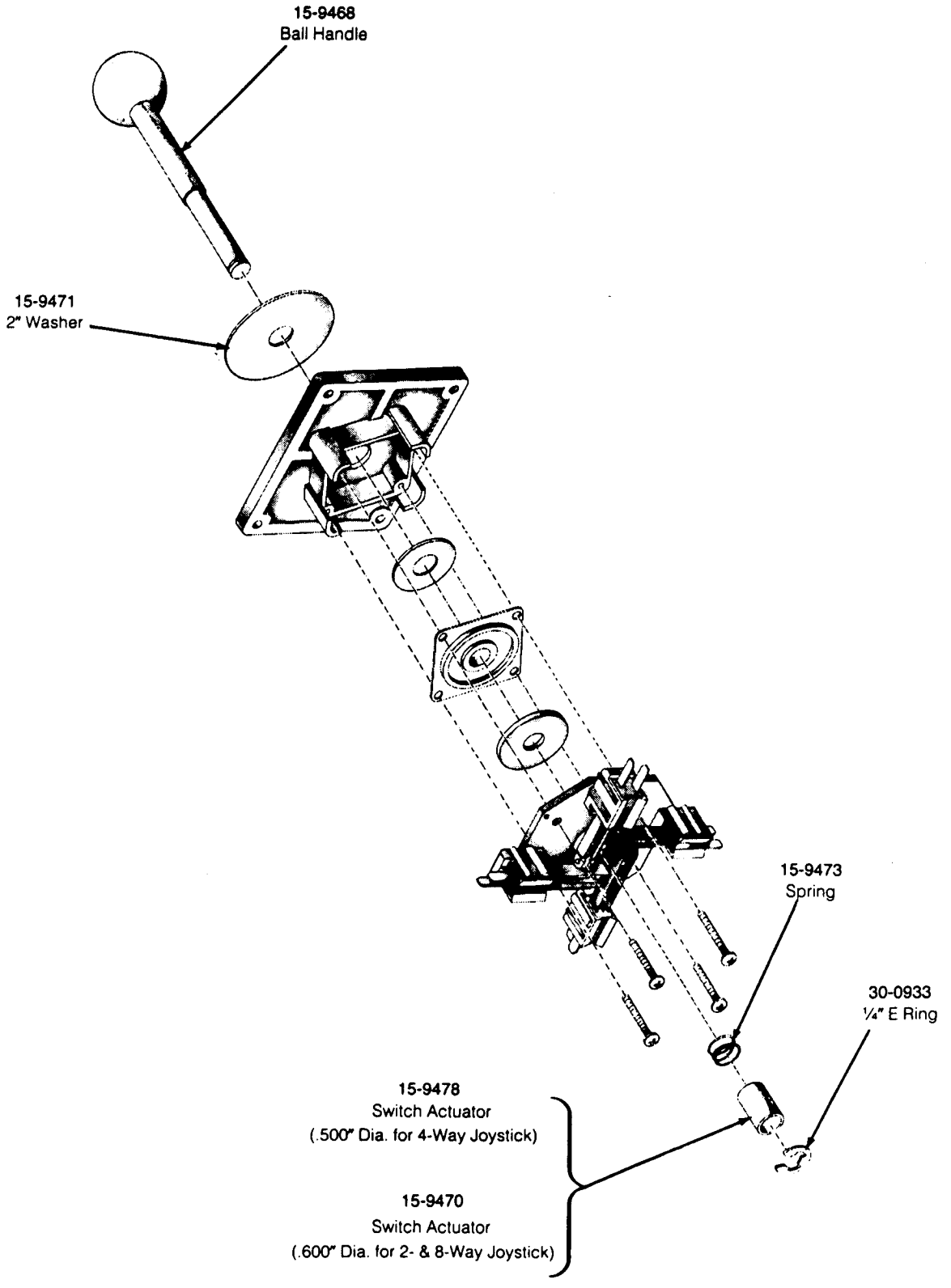

Wico Joystick Assembly (700-0163-01)

*** Where Applicable**

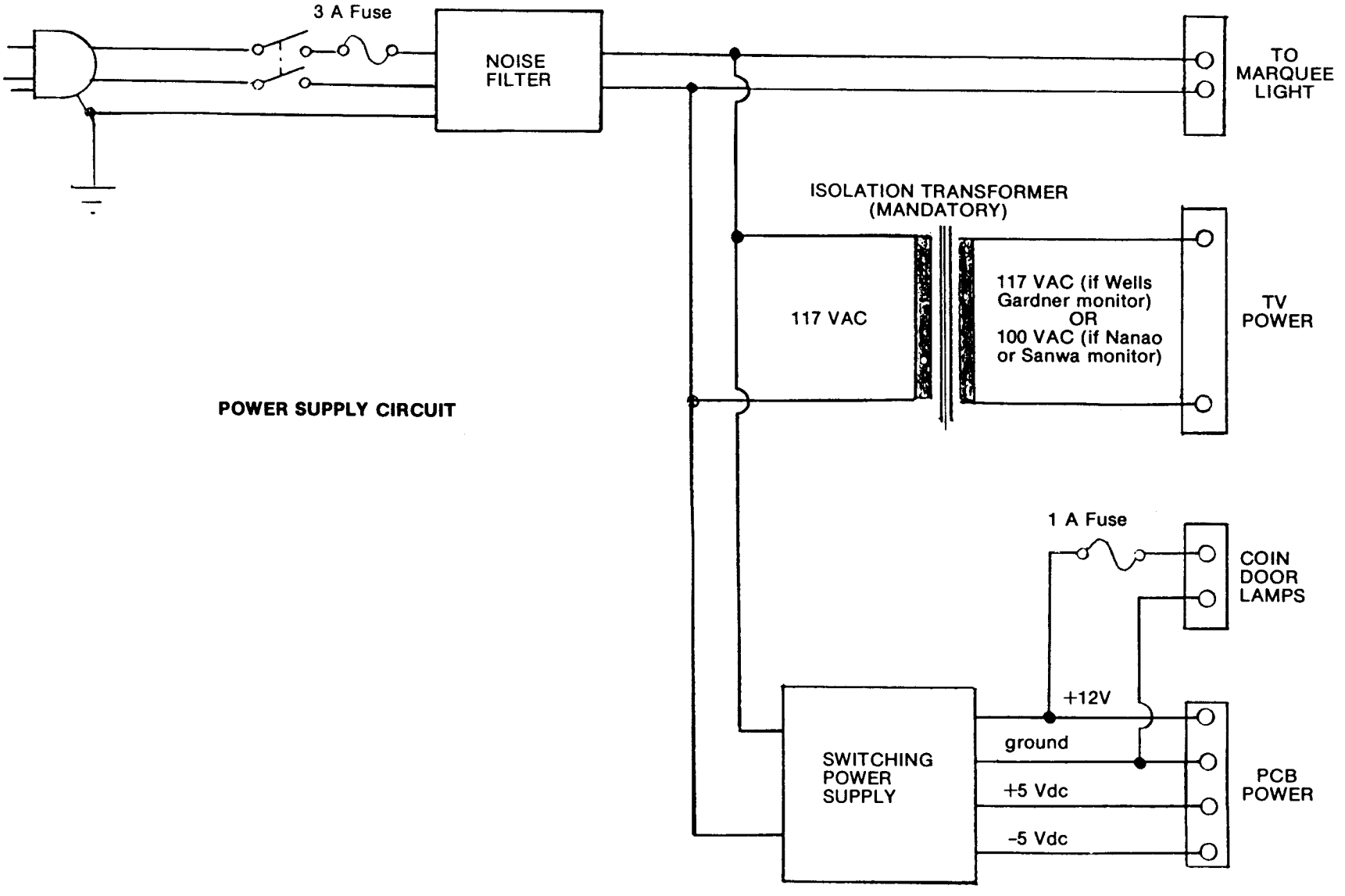

POWER SUPPLY CIRCUIT

SOLDER SIDE			PARTS SIDE
GND	A	1	GND
GND	B	2	GND
+5V	C	3	+5V
+5V	D	4	+5V
-5V	E	5	-5V
+12V	F	6	+12V
	H	7	
COIN COUNTER 2	J	8	COIN COUNTER 1
COIN LOCK OUT 2	K	9	COIN LOCK OUT 1
SP (-)	L	10	SP (+)
N.C	M	11	N.C
VIDEO GREEN	N	12	VIDEO RED
VIDEO SYNC	P	13	VIDEO BLUE
SERVICE SW	R	14	VIDEO GND
TILT SW	S	15	TEST SW
COIN SW 2	T	16	COIN SW 1
START SW 2	U	17	START SW 1
2P UP	V	18	1P UP
2P DOWN	W	19	1P DOWN
2P LEFT	X	20	1P LEFT
2P RIGHT	Y	21	1P RIGHT
2P PUSH 1	Z	22	1P PUSH 1
2P PUSH 2	a	23	1P PUSH 2
2P PUSH 3	b	24	1P PUSH 3
N.C	c	25	N.C
N.C	d	26	N.C
GND	e	27	GND
GND	f	28	GND

PARTS NAME

CR7E-560A-3.96E : (HIROSE)
OR
1168-056 -009 : (KEL)

出 図
MAR 3 1 1987

DRAW NO.					TITLE
DATE · ·	DRAWN	CHECKED	DESIGNED	APPROVED	JAMMA EDGE CONECTOR
SCALE NTS					CAPCOM 48
3RD ANGLE PROJECTION	DIM IN mm	SHEET			

LIMITED WARRANTY

CAPCOM, USA, INC. ("Seller"), warrants only to the initial purchaser of its products that the items listed below are free from defects in material and workmanship under normal use and service for the warranty periods specified:

A.	Printed circuit boards	(90) days
B.	Television monitor	(30) days

No other parts of Seller's products are warranted.

Warranty periods are effective from the initial date of shipment from Seller to its authorized distributors.

Seller's sole liability shall be, at its option, to repair or replace products which are returned to Seller during the warranty periods specified, provided:

A. Seller is notified promptly upon discovery by buyer that stated products are defective.

B. Such products are properly packaged and then returned, prepaid to Seller's plant.

This warranty does not apply to any parts damaged during shipping or handling, or due to improper installation or usage, or alteration. In no event shall Seller be liable for any anticipated profits, loss of profits, loss of use, incidental or consequenmtial damages or any other losses incurred by the customer in connection with the purchase of a CAPCOM USA, Inc. product.

(WARRANTY DISCLAIMER)

EXCEPT AS SPECIFICALLY PROVIDED IN A WRITTEN CONTRACT BETWEEN SELLER AND PURCHASER, THERE ARE NO OTHER WARRANTIES, EXPRESSED OR IMPLIED, INCLUDING ANY IMPLIED WARRANTIES OF MERCHANTABILITY OR FITNESS FOR A PARTICULAR PURPOSE.

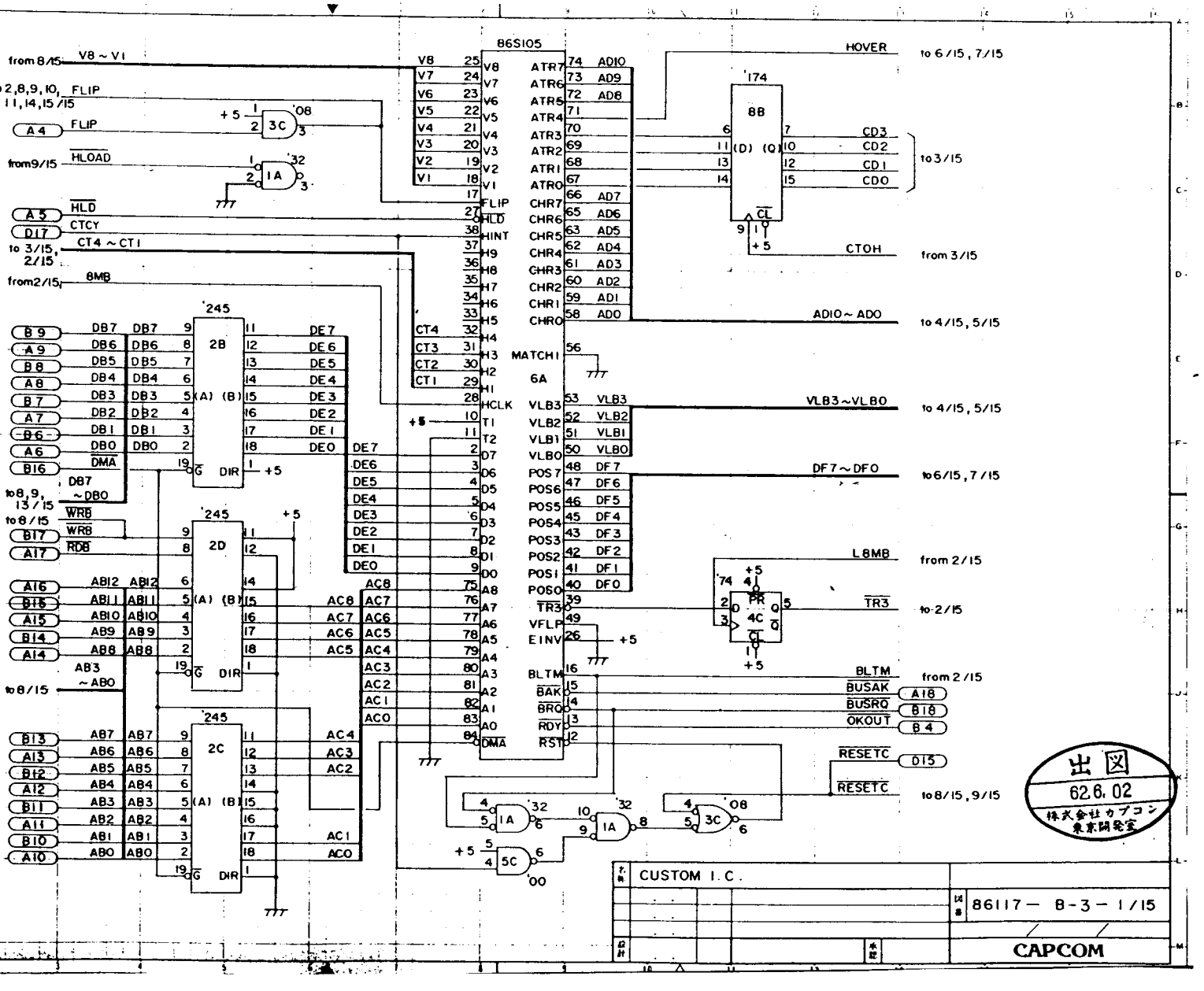
B6S105
from 8/15
V8 ~ V1
to 2,8,9,10, 11,14,15/15
FLIP
A4
from9/15
HLOAD
A5
HLD
D17
CTCY
to 3/15, 2/15
CT4 ~ CT1
from2/15
8MB
B9
A9
B8
A8
B7
A7
B6
A6
B16
DMA
to8,9, 13/15
DB7 ~DB0
WRB
to 8/15
B17
A17
RDB
A16
B15
A15
B14
A14
AB3 ~AB0
B13
A13
B12
A12
B11
A11
B10
A10
'245
2B
2C
2D
DIR
'08
3C
'32
1A
5C
'00
HOVER
to 6/15, 7/15
'174
8B
CD3
CD2
CD1
CD0
to 3/15
CTOH
from 3/15
ADIO~ ADO
to 4/15, 5/15
VLB3~VLB0
DF7~DF0
to6/15, 7/15
L8MB
from 2/15
'74
4C
TR3
to 2/15
BLTM
BUSAK
BUSRQ
OKOUT
RESETC
to 8/15, 9/15
CUSTOM I.C.
86117— B-3-1/15
CAPCOM
出図
62.6.02
株式会社カプコン
東京開発室

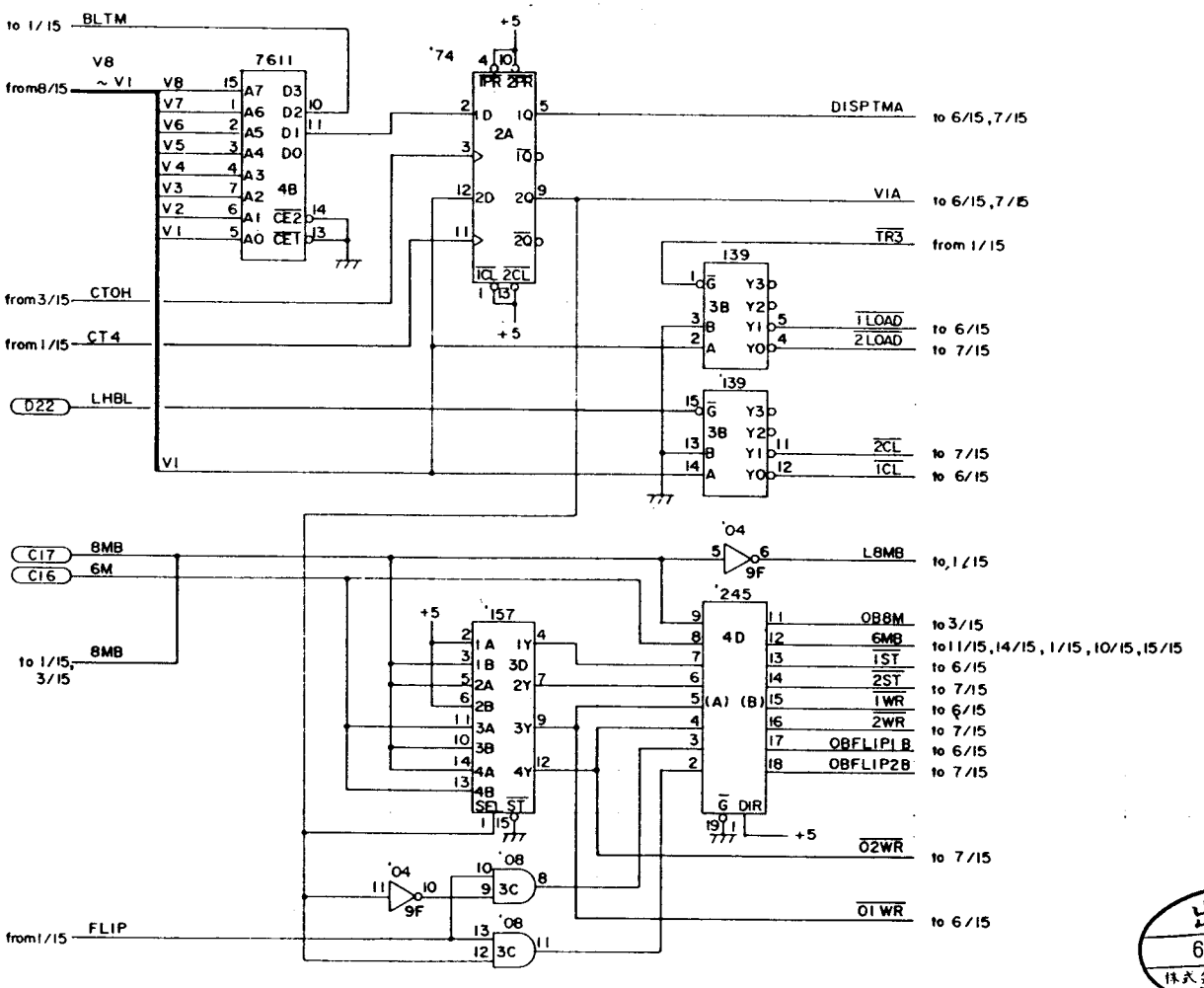

出図
62.6.02
株式会社カプコン
東京開発室

OBJECT TIMING		
	86117 — B-3— 2/15	
		CAPCOM

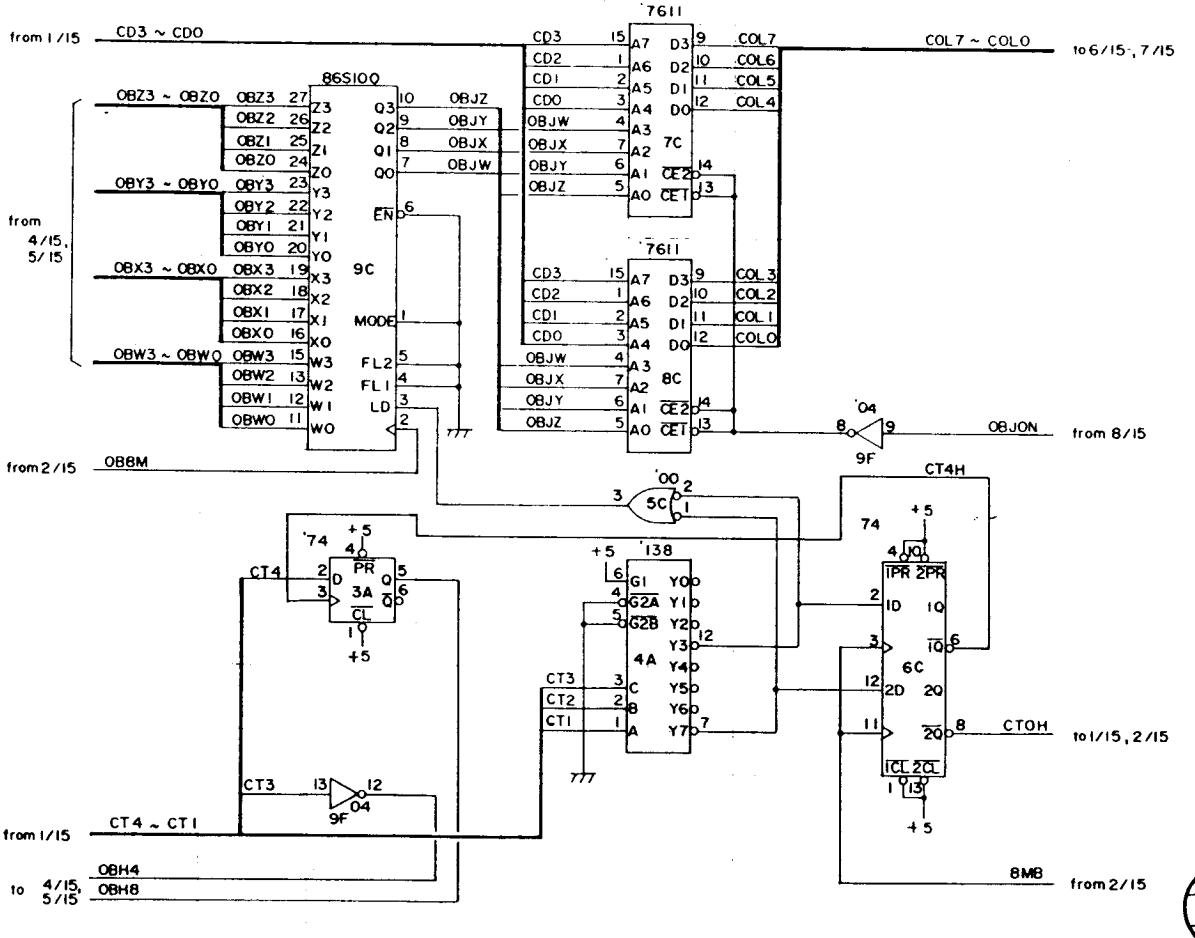

出図
62.6.02
株式会社カプコン
東京開発室

名称	OBJECT TIMING 2	
図番	86117 — B-3 — 3/15	
設計		CAPCOM

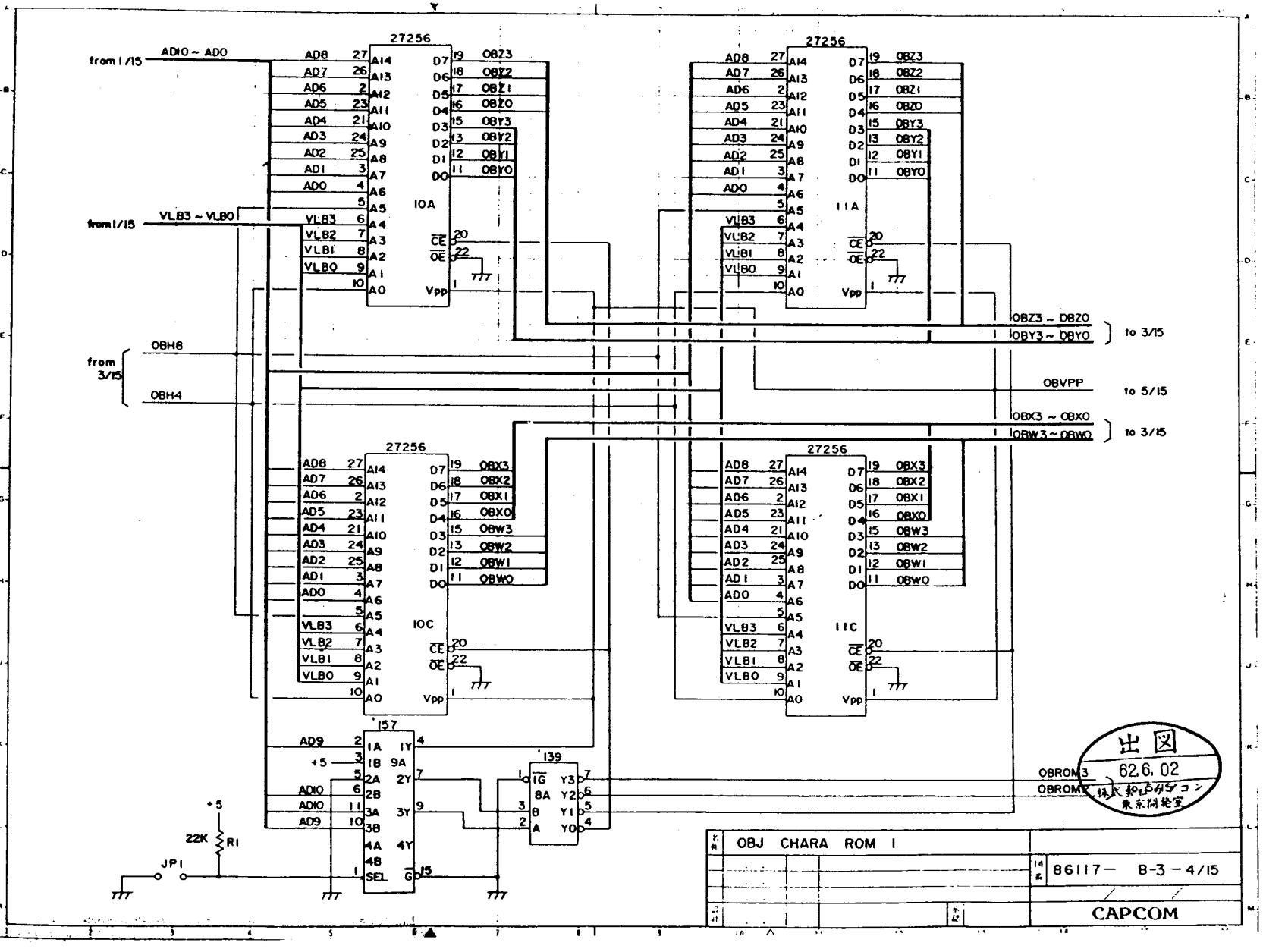
from 1/15
AD10 ~ AD0
from 1/15
VLB3 ~ VLB0
from 3/15
OBH8
OBH4
27256
10A
11A
10C
11C
OBZ3 ~ OBZ0
OBY3 ~ OBY0
to 3/15
OBVPP
to 5/15
OBX3 ~ OBX0
OBW3 ~ OBW0
to 3/15
'157
'139
+5
22K
R1
JP1
OBROM3
OBROM2
出図
62.6.02
株式会社カプコン
東京開発室
OBJ CHARA ROM I
86117— B-3 — 4/15
CAPCOM

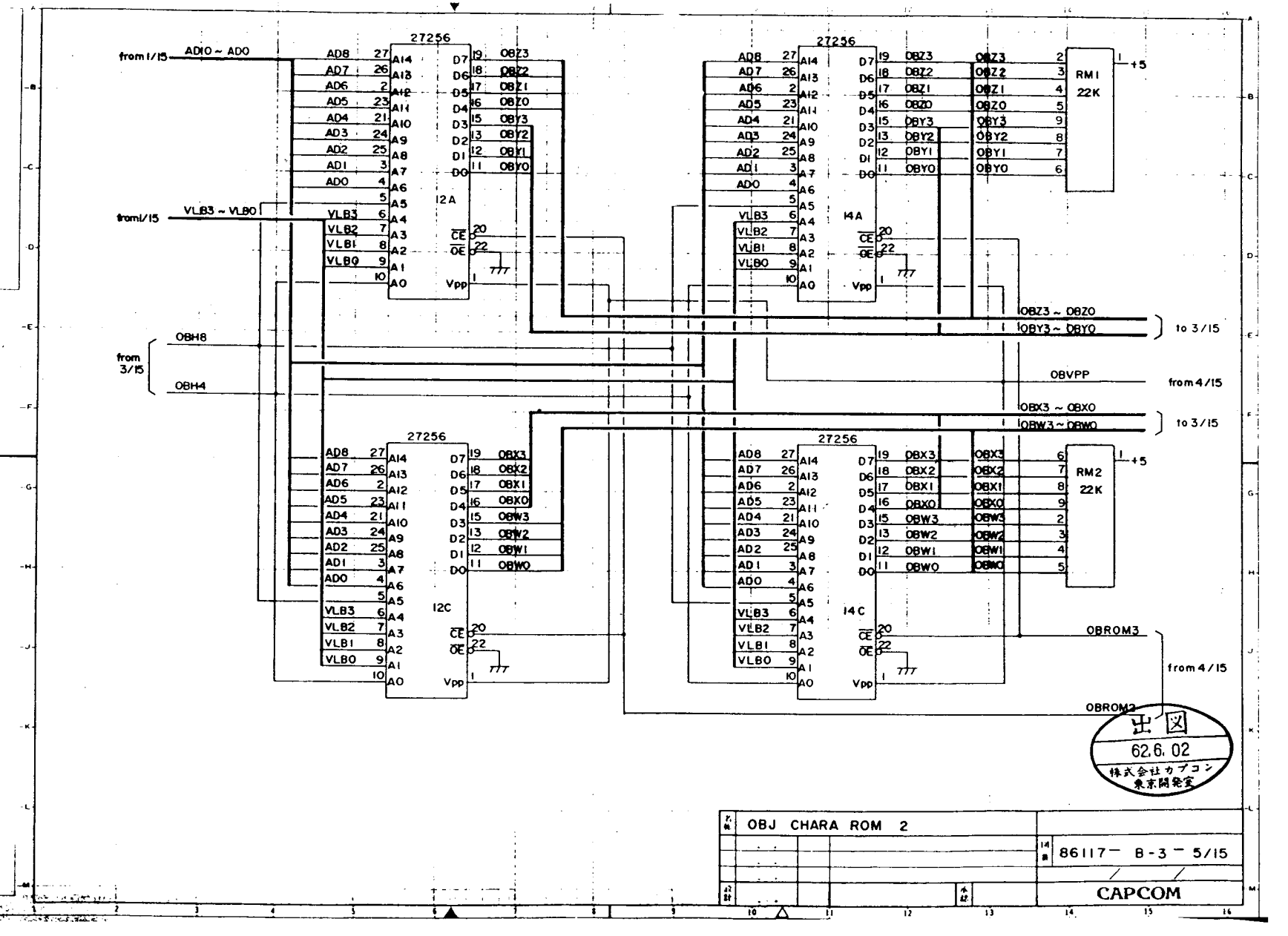
from 1/15
AD10 ~ AD0
from1/15
VLB3 ~ VLB0
from 3/15
OBH8
OBH4
27256
12A
12C
14A
14C
RM1
22K
RM2
22K
+5
OBZ3 ~ OBZ0
OBY3 ~ OBY0
to 3/15
OBVPP
from4/15
OBX3 ~ OBX0
OBW3 ~ OBW0
OBROM3
OBROM2
出図
62.6.02
株式会社カプコン
東京開発室
OBJ CHARA ROM 2
86117 — B-3 — 5/15
CAPCOM

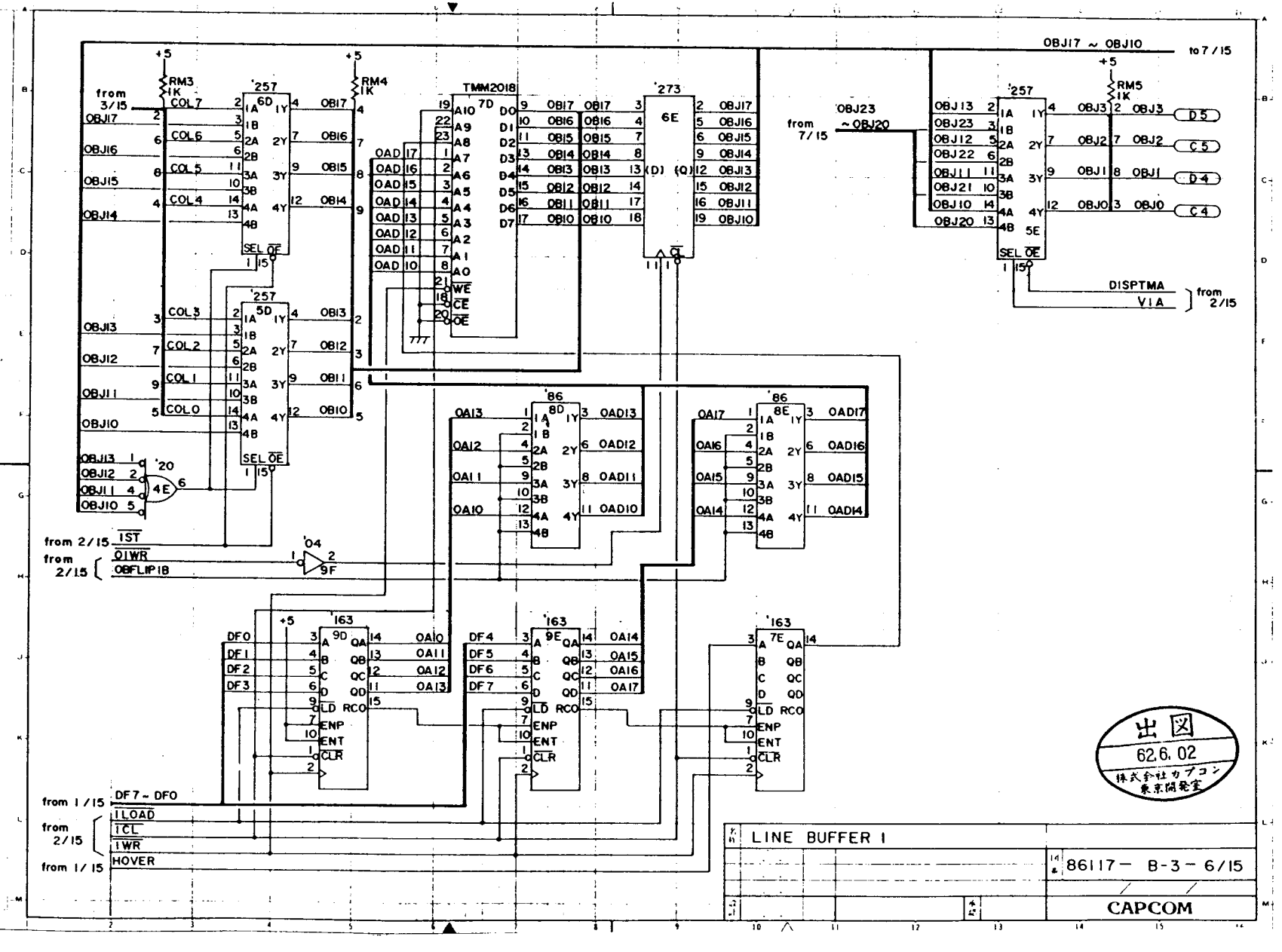
LINE BUFFER 1
86117- B-3-6/15
CAPCOM
出図
62.6.02
株式会社カプコン
東京開発室
TMM2018
'257
'273
'86
'163
'20
'04
RM3 1K
RM4 1K
RM5 1K
from 3/15
from 7/15
to 7/15
from 2/15
from 1/15
OBJ17 ~ OBJ10
OBJ23 ~ OBJ20
DISPTMA
VIA
DF7 ~ DF0
ILOAD
ICL
IWR
HOVER
IST
OIWR
OBFLIP1B

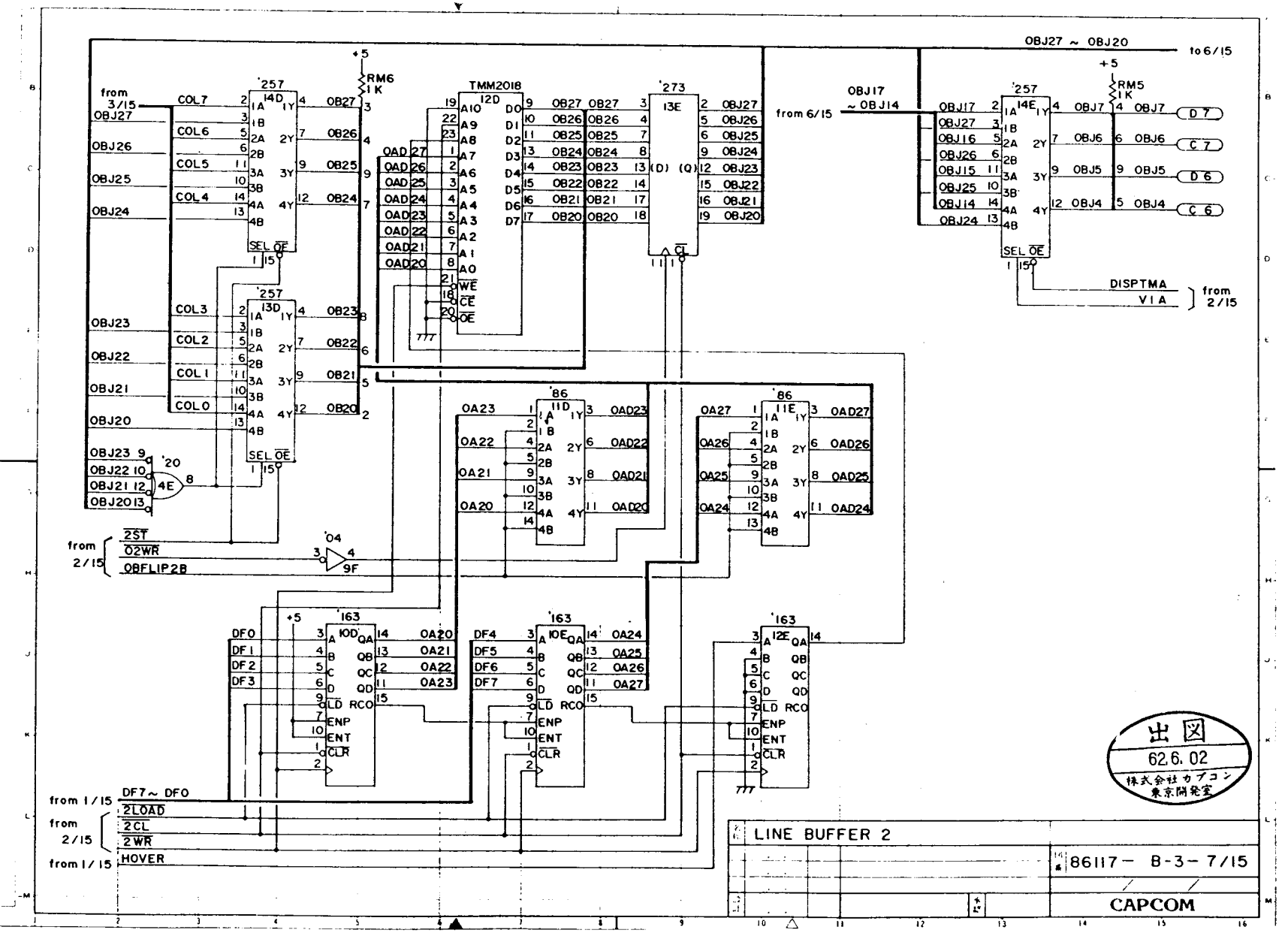
OBJ27 ~ OBJ20
to 6/15
from 3/15
OBJ27
OBJ26
OBJ25
OBJ24
OBJ23
OBJ22
OBJ21
OBJ20
COL7
COL6
COL5
COL4
COL3
COL2
COL1
COL0
'257
14D
13D
RM6
1K
TMM2018
12D
'273
13E
OBJ17
~ OBJ14
from 6/15
14E
RM5
1K
D7
C7
D6
C6
DISPTMA
VIA
from 2/15
'20
4E
'04
9F
2ST
02WR
OBFLIP2B
'86
11D
11E
OA23
OA22
OA21
OA20
OA27
OA26
OA25
OA24
OAD23
OAD22
OAD21
OAD20
OAD27
OAD26
OAD25
OAD24
'163
10D
10E
12E
DF0
DF1
DF2
DF3
DF4
DF5
DF6
DF7
OA20
OA21
OA22
OA23
OA24
OA25
OA26
OA27
LD
ENP
ENT
CLR
RCO
from 1/15
DF7~ DFO
2LOAD
2CL
2WR
HOVER
出図
62.6.02
株式会社カプコン
東京開発室
LINE BUFFER 2
86117- B-3-7/15
CAPCOM

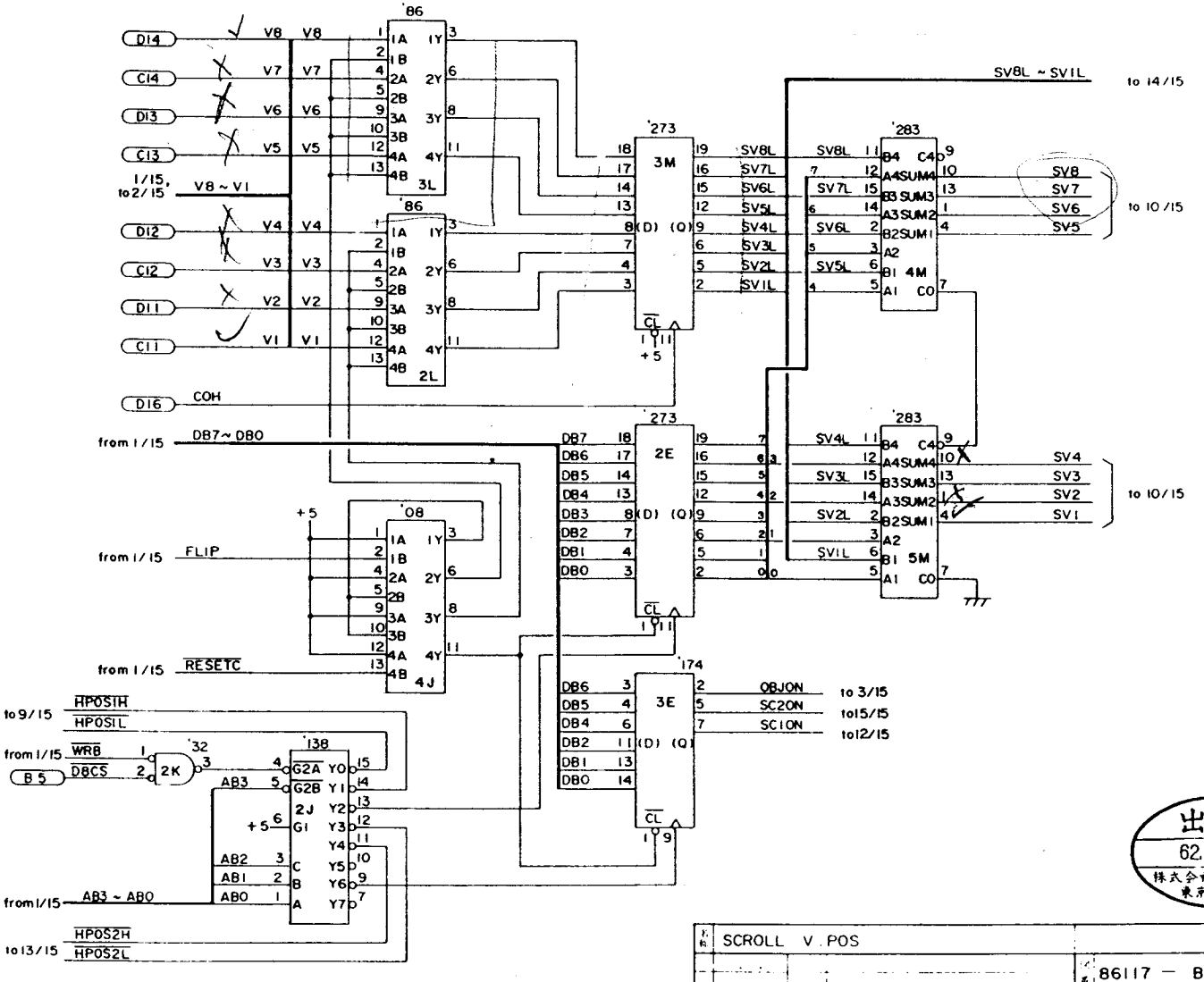
D14
C14
D13
C13
1/15, to2/15
V8 ~ V1
D12
C12
D11
C11
D16
COH
from 1/15
DB7~ DB0
from 1/15
FLIP
from 1/15
RESETC
to9/15
HPOS1H
HPOS1L
from 1/15
WRB
DBCS
B5
AB3
AB2
AB1
AB0
from1/15
AB3 ~ AB0
HPOS2H
to13/15
HPOS2L
'86
'273
'283
'08
'32
'138
'174
3M
4M
5M
2E
3E
4J
2K
2J
SV8L ~ SV1L
to 14/15
to 10/15
to 10/15
OBJON
SC2ON
SC1ON
to 3/15
to15/15
to12/15
出図
62.6.02
株式会社カプコン
東京開発室
SCROLL V.POS
86117 — B-3 — 8/15
CAPCOM

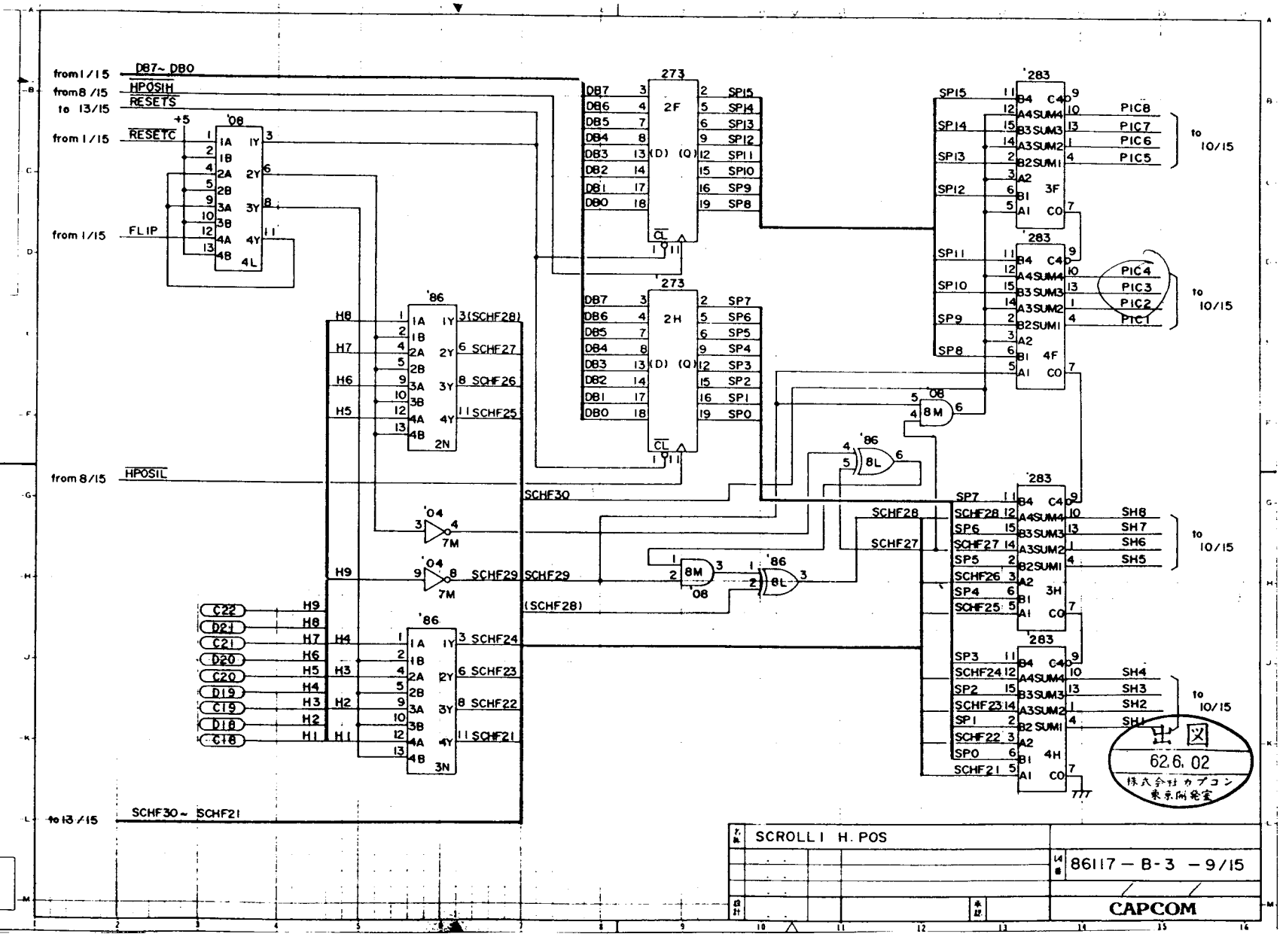
from 1/15
DB7~DB0
from 8/15
HPOSIH
to 13/15
RESETS
+5
from 1/15
RESETC
from 1/15
FLIP
'08
1A 1B 2A 2B 3A 3B 4A 4B
1Y 2Y 3Y 4Y
4L
'273
2F
2H
DB7 DB6 DB5 DB4 DB3 DB2 DB1 DB0
(D) (Q)
CL
SP15 SP14 SP13 SP12 SP11 SP10 SP9 SP8
SP7 SP6 SP5 SP4 SP3 SP2 SP1 SP0
'283
3F
4F
3H
4H
B4 C4 A4 SUM4 B3 SUM3 A3 SUM2 B2 SUM1 A2 B1 A1 CO
PIC8 PIC7 PIC6 PIC5
PIC4 PIC3 PIC2 PIC1
SH8 SH7 SH6 SH5
SH4 SH3 SH2 SH1
to 10/15
'86
2N
3N
1A 1B 2A 2B 3A 3B 4A 4B
1Y 2Y 3Y 4Y
3(SCHF28)
6 SCHF27
8 SCHF26
11 SCHF25
3 SCHF24
6 SCHF23
8 SCHF22
11 SCHF21
H8 H7 H6 H5 H4 H3 H2 H1
H9
from 8/15
HPOSIL
'04
7M
9 8 SCHF29
SCHF30
SCHF29
(SCHF28)
SCHF28
SCHF27
8M
8L
C22 D21 C21 D20 C20 D19 C19 D18 C18
to 13/15
SCHF30~SCHF21
出図
62.6.02
株式会社カプコン
東京開発室
SCROLL1 H. POS
86117-B-3 -9/15
CAPCOM

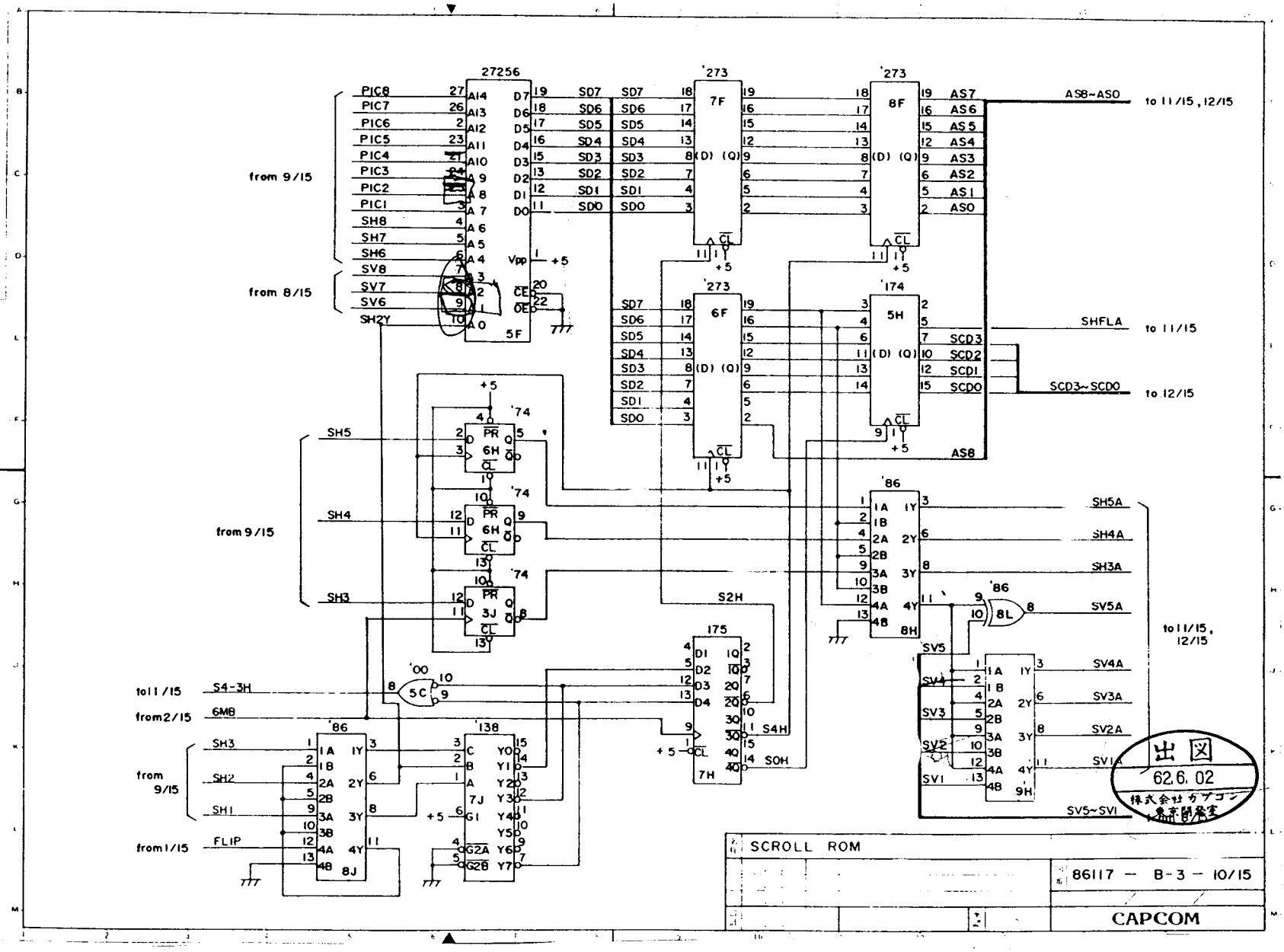
27256
5F
'273
7F
8F
6F
'174
5H
'74
6H
3J
'86
8L
9H
8H
8J
'00
5C
'175
7H
'138
7J
from 9/15
from 8/15
from 9/15
to 11/15
from 2/15
from 9/15
from 1/15
AS8~AS0
to 11/15, 12/15
SHFLA
to 11/15
SCD3~SCD0
to 12/15
to 11/15, 12/15
SV5~SV1
S2H
S4H
S0H
S4-3H
6MB
FLIP
SCROLL ROM
86117 — B-3 — 10/15
CAPCOM
出図
62.6.02
株式会社カプコン
東京開発室

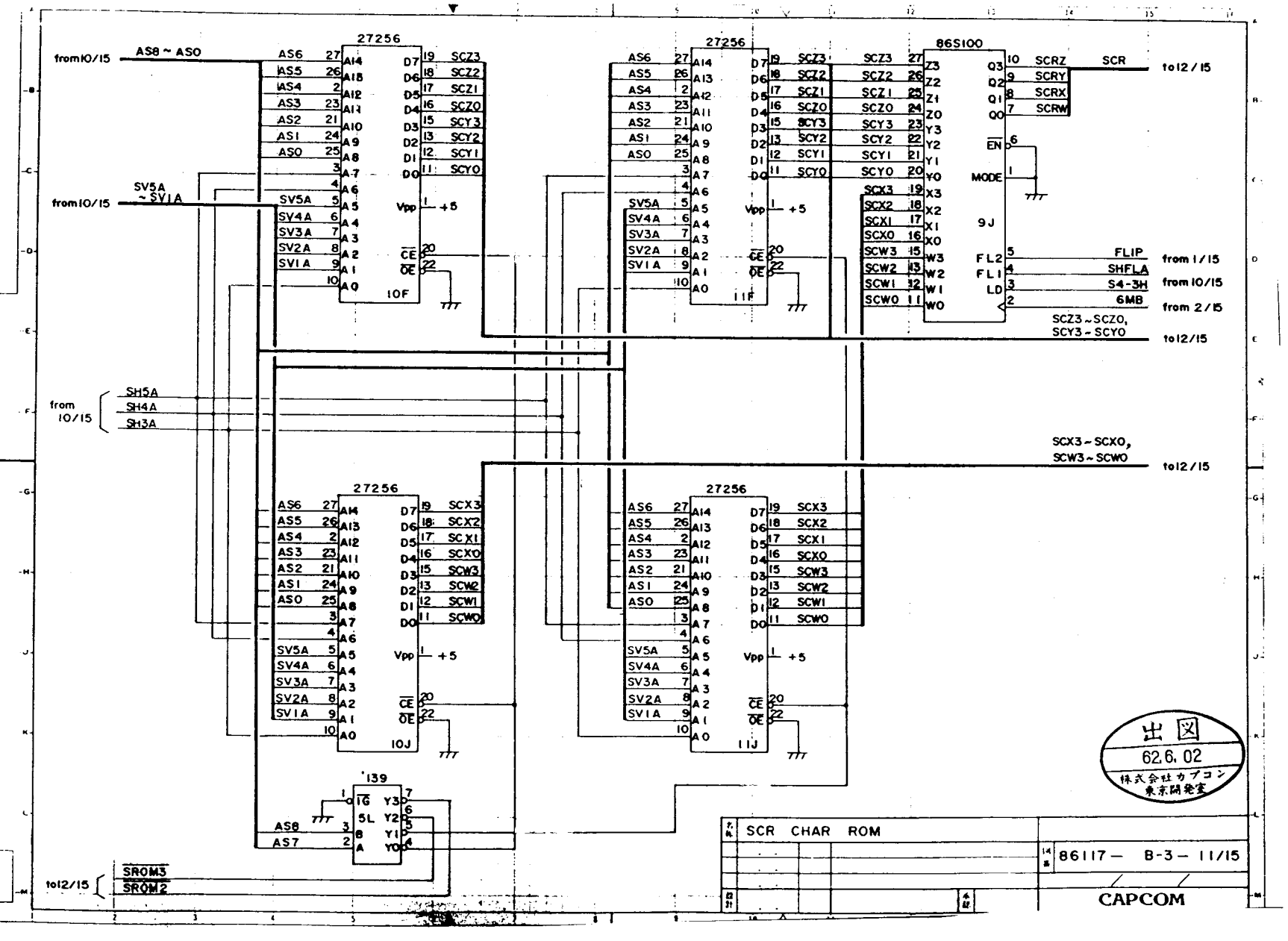
from10/15
AS8 ~ AS0
SV5A ~ SV1A
from10/15
27256
10F
27256
11F
86S100
9J
SCZ3 ~ SCZ0,
SCY3 ~ SCY0
to12/15
SCR
to12/15
FLIP
from 1/15
SHFLA
from10/15
S4-3H
6MB
from 2/15
from 10/15
SH5A
SH4A
SH3A
SCX3 ~ SCX0,
SCW3 ~ SCW0
to12/15
27256
10J
27256
11J
'139
AS8
AS7
to12/15
SROM3
SROM2
出図
62.6.02
株式会社カプコン
東京開発室
SCR CHAR ROM
86117 — B-3 — 11/15
CAPCOM

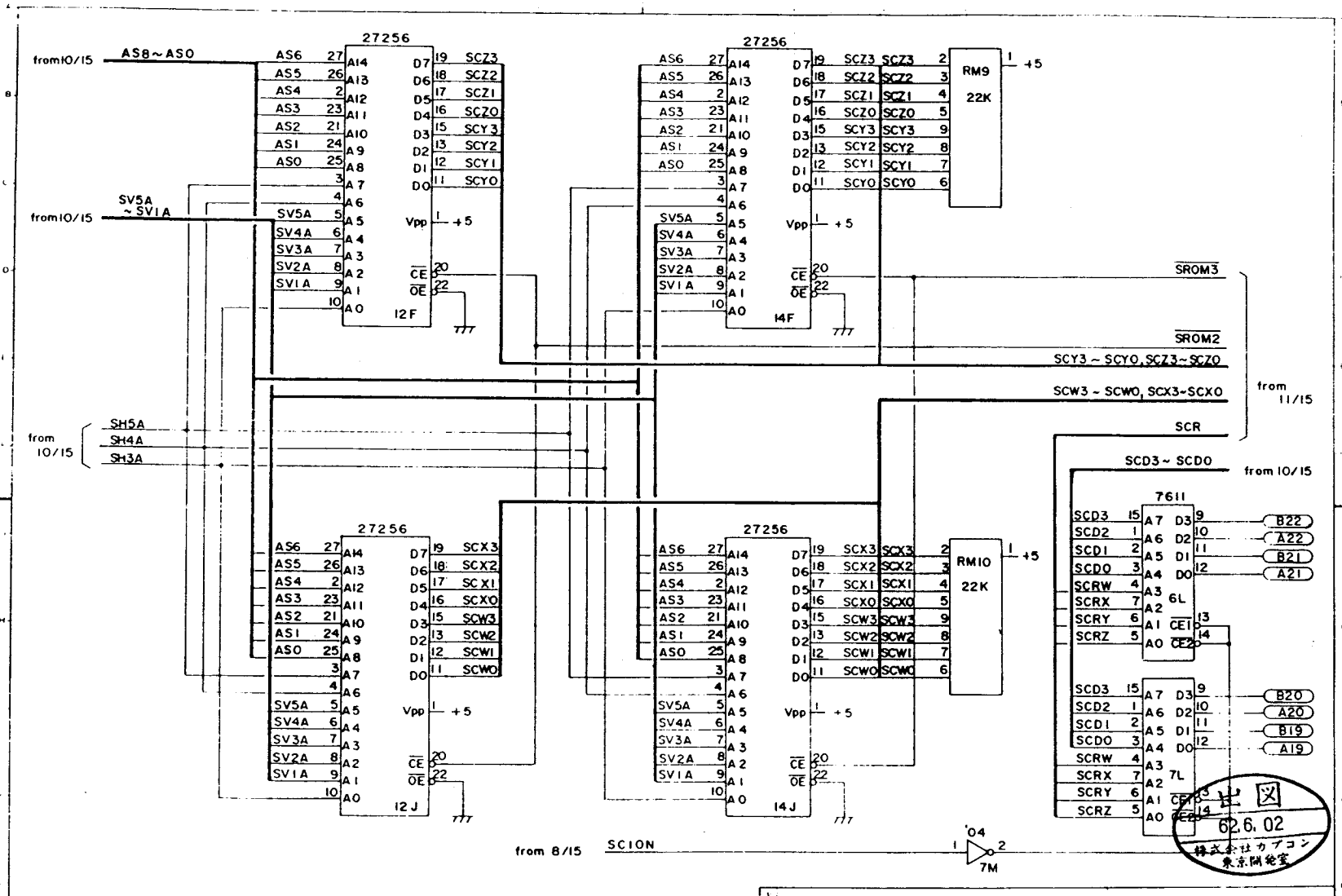
from10/15
AS8~AS0
SV5A ~SV1A
from10/15
from 10/15
SH5A
SH4A
SH3A
27256
12F
27256
14F
27256
12J
27256
14J
RM9
22K
RM10
22K
+5
SROM3
SROM2
SCY3 ~ SCY0, SCZ3~SCZ0
SCW3 ~ SCW0, SCX3~SCX0
from 11/15
SCR
SCD3 ~ SCD0
from 10/15
7611
6L
7L
B22
A22
B21
A21
B20
A20
B19
A19
from 8/15
SCION
'04
7M
出図
62.6.02
株式会社カプコン
東京開発室
SCR CHAR ROM
86117 — B-3 — 12/15
CAPCOM

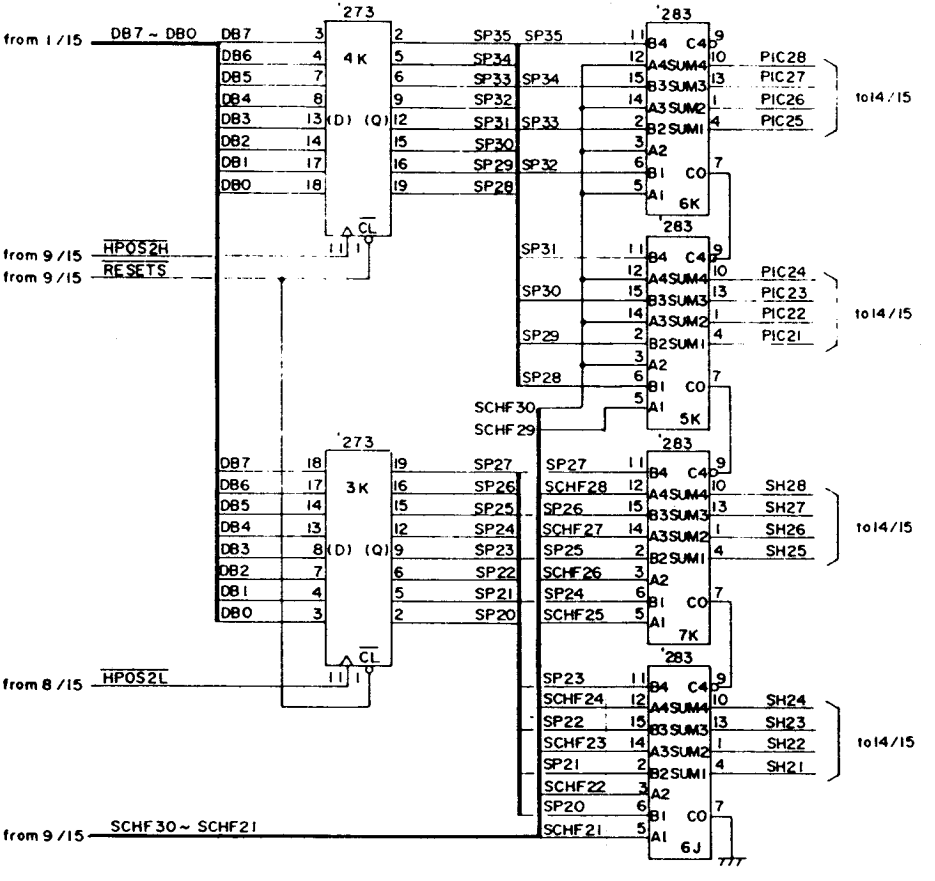

出図
62.6.02
株式会社カプコン
東京開発室

SCROLL 2 H.POS	
	86117 — B-3 — 13/15
	CAPCOM

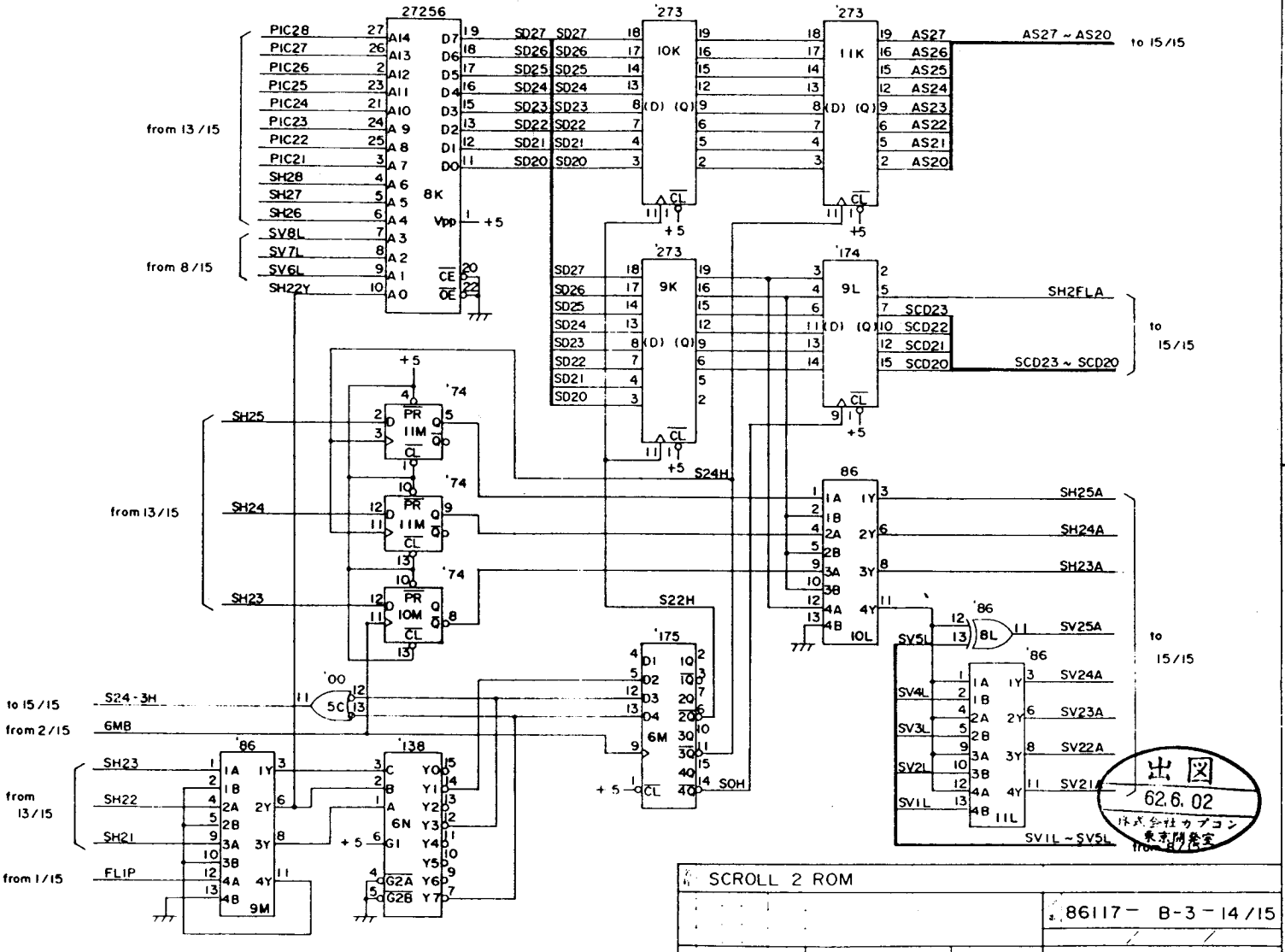
27256
8K
PIC28
PIC27
PIC26
PIC25
PIC24
PIC23
PIC22
PIC21
SH28
SH27
SH26
SV8L
SV7L
SV6L
SH22Y
from 13/15
from 8/15
Vpp
+5
CE
OE
SD27
SD26
SD25
SD24
SD23
SD22
SD21
SD20
'273
10K
11K
9K
AS27
AS26
AS25
AS24
AS23
AS22
AS21
AS20
AS27 ~ AS20
to 15/15
'174
9L
SH2FLA
SCD23
SCD22
SCD21
SCD20
SCD23 ~ SCD20
'74
11M
10M
SH25
SH24
SH23
S24H
S22H
86
8L
10L
SH25A
SH24A
SH23A
SV25A
SV24A
SV23A
SV22A
SV21A
SV5L
SV4L
SV3L
SV2L
SV1L
11L
SV1L ~ SV5L
'175
6M
SOH
'00
5C
S24-3H
6MB
to 15/15
from 2/15
'86
9M
SH23
SH22
SH21
FL1P
from 13/15
from 1/15
'138
6N
G1
G2A
G2B
Y0
Y1
Y2
Y3
Y4
Y5
Y6
Y7
出図
62.6.02
株式会社カプコン
東京開発室
SCROLL 2 ROM
86117- B-3-14/15
CAPCOM

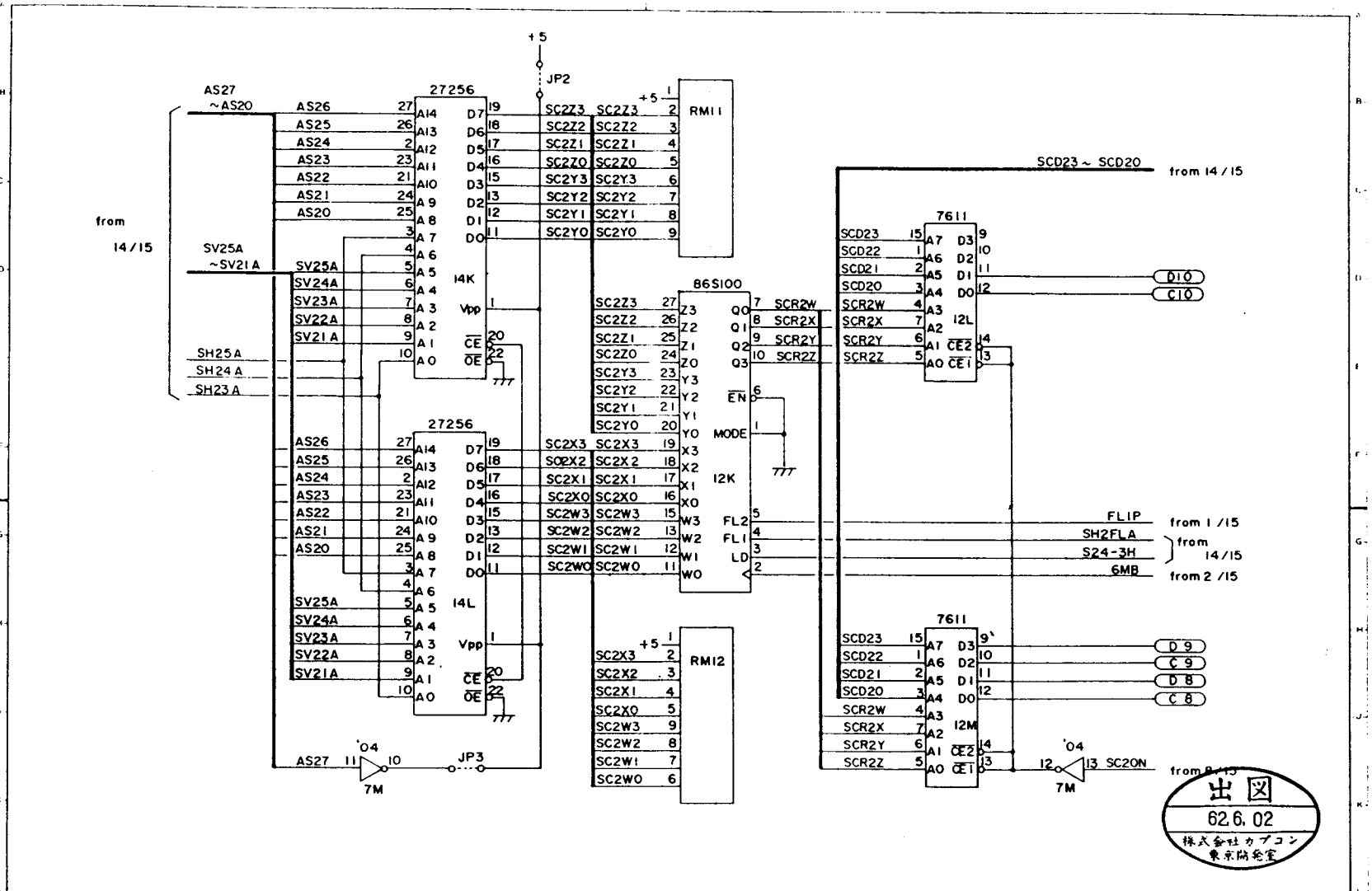

SCR 2 CHAR ROM

86117— B-3-15/15

CAPCOM