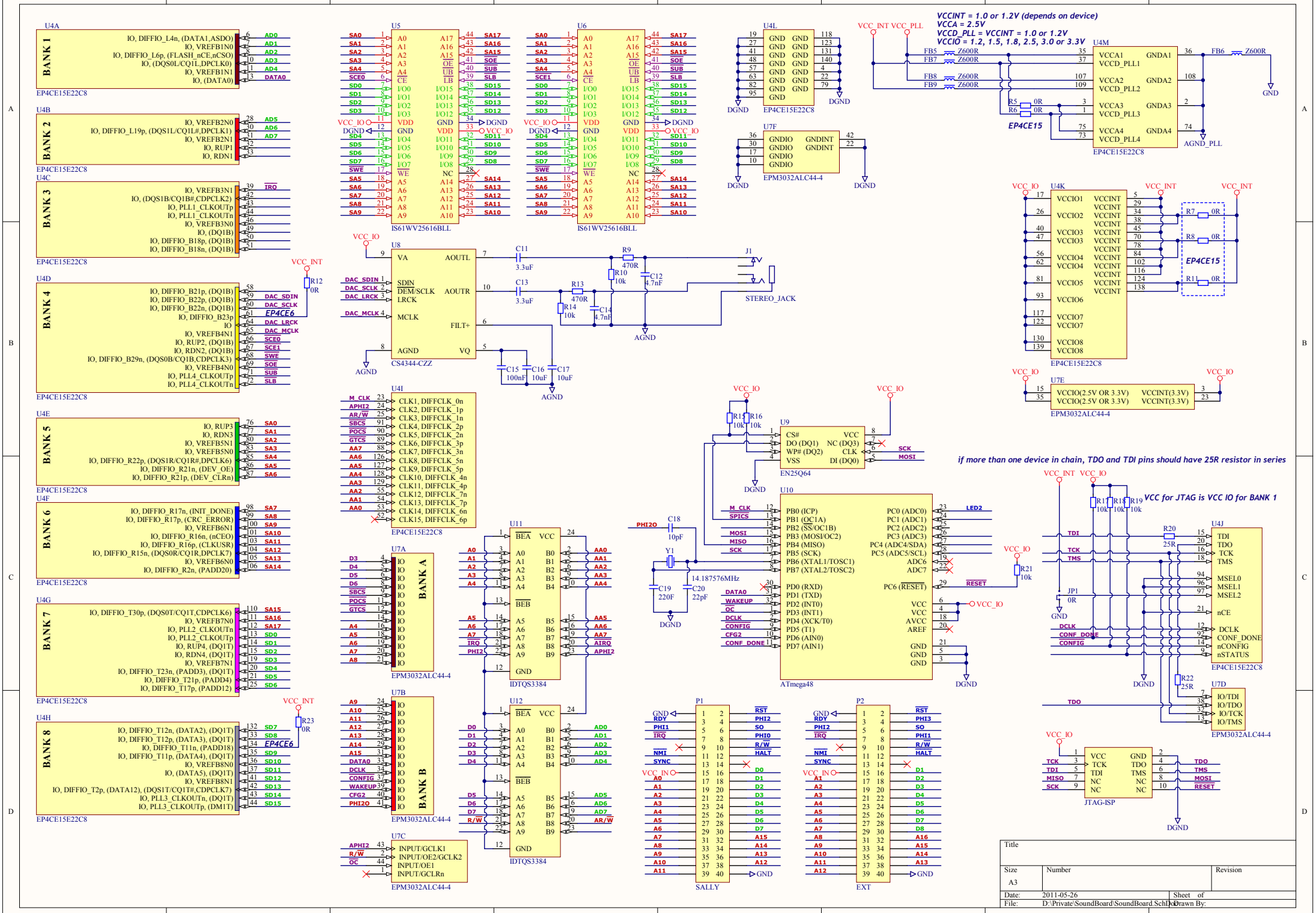
VCCINT = 1.0 or 1.2V (depends on device)
VCCA = 2.5V
VCCD_PLL = VCCINT = 1.0 or 1.2V
VCCIO = 1.2, 1.5, 1.8, 2.5, 3.0 or 3.3V
EP4CE15
EP4CE6
if more than one device in chain, TDO and TDI pins should have 25R resistor in series
VCC for JTAG is VCC IO for BANK 1
U4A BANK 1 EP4CE15E22C8
U4B BANK 2 EP4CE15E22C8
U4C BANK 3 EP4CE15E22C8
U4D BANK 4 EP4CE15E22C8
U4E BANK 5 EP4CE15E22C8
U4F BANK 6 EP4CE15E22C8
U4G BANK 7 EP4CE15E22C8
U4H BANK 8 EP4CE15E22C8
U5 IS61WV25616BLL
U6 IS61WV25616BLL
U8 CS4344-CZZ
U4I EP4CE15E22C8
U7A BANK A EPM3032ALC44-4
U7B BANK B EPM3032ALC44-4
U7C INPUT/GCLK1 INPUT/OE2/GCLK2 INPUT/OE1 INPUT/GCLRn EPM3032ALC44-4
U11 IDTQS3384
U12 IDTQS3384
U4L EP4CE15E22C8
U7F EPM3032ALC44-4
U4M EP4CE15E22C8
U4K EP4CE15E22C8
U7E EPM3032ALC44-4
U9 EN25Q64
U10 ATmega48
U4J EP4CE15E22C8
U7D EPM3032ALC44-4
JTAG-ISP
P1 SALLY
P2 EXT
J1 STEREO_JACK
VCC_INT VCC_PLL
VCC_IO
DGND
AGND
GND
Title
Size A3
Number
Revision
Date: 2011-05-26
Sheet of
File: D:\Private\SoundBoard\SoundBoard.SchDoc
Drawn By:

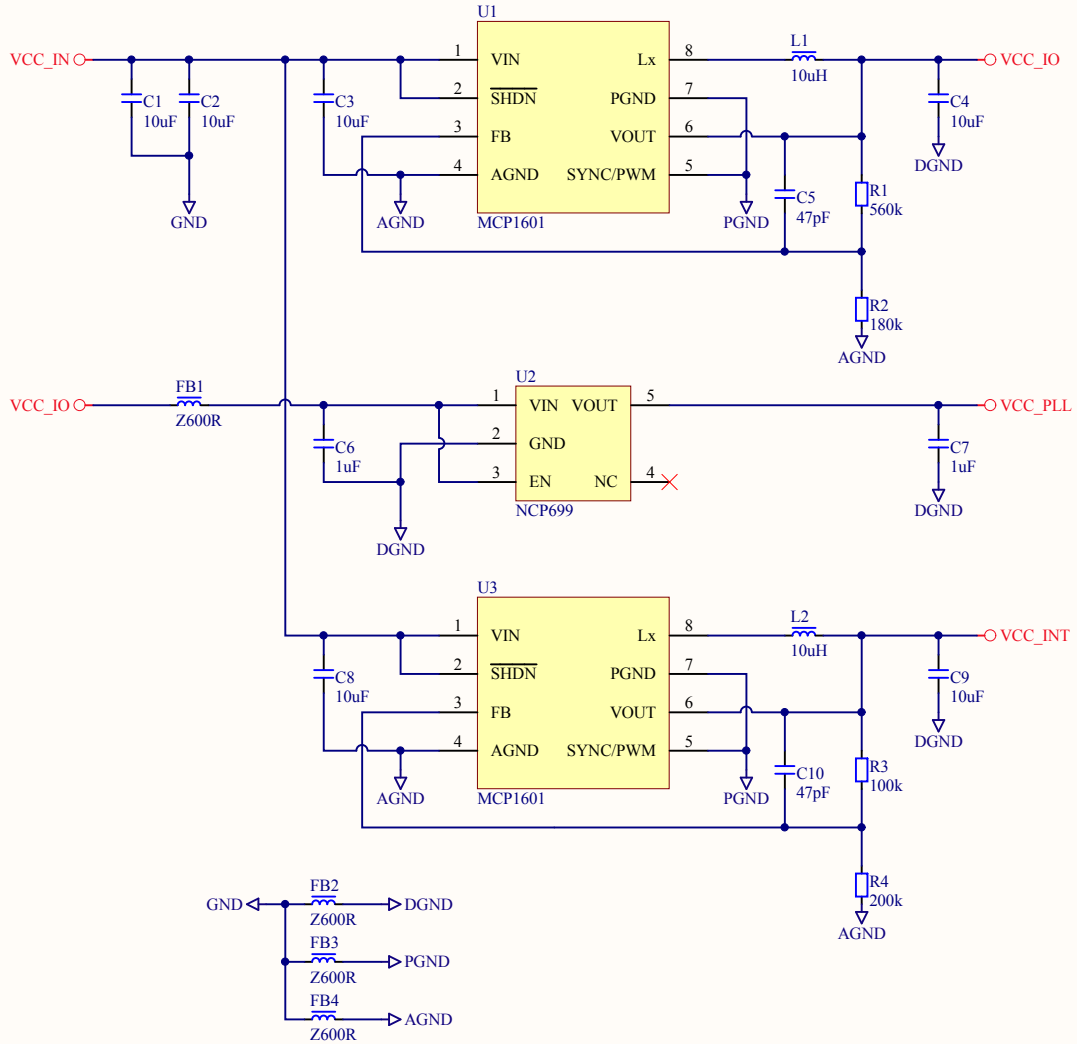

Title		
Size A4	Number	Revision
Date: 2011-05-26		Sheet of
File: D:\Private\..\SoundBoard-PSU.SchDoc		Drawn By: